Distributed by

Raymarine

Any reference to Raytheon or RTN in this manual should be interpreted as Raymarine. The names Raytheon and RTN are owned by the Raytheon Company.

www.Busse-Yachtshop.de email: info@busse-yachtshop.de

Type 150/400 Autopilot System

Installation Guide

Document number: 81173-3
Date: June 2001

Raymarine
ON BOARD

www.Busse-Yachtshop.de email: info@busse-yachtshop.de

81173_3.book Page ii Thursday, June 7, 2001 11:51 AM

Autohelm, HSB (High Speed Bus), SailPilot, SeaTalk and SportPilot are registered trademarks of Raymarine Ltd.

Raymarine, AST (Advanced Steering Technology), AutoAdapt, AutoLearn, AutoRelease, AutoSeastate, AutoTack, AutoTrim, FastTrim, GyroPlus, RayGyro, RayPilot and WindTrim are trademarks of Raymarine Ltd.

Handbook contents © Raymarine Ltd 2001.

www.Busse-Yachtshop.de email: info@busse-yachtshop.de

81173_3.book Page iii Thursday, June 7, 2001 11:51 AM

Contents

About this handbook ..... **v**

Important Information ..... **vi**

Warranty vi
Safety notices vi
EMC conformance vii
Handbook information vii

Step 1: Check the Installation Kit **1**

1.1 Read this handbook 1
The autopilot system – core pack contents 1
The autopilot system – other key components 3
The autopilot system – extended systems 3
1.2 Obtain installation tools 4
1.3 Check parts supplied 4

Step 2: Check Locations **6**

2.1 Identify suitable locations 6
2.2 EMC installation guidelines 7

Step 3: Install the Course Computer **9**

3.1 Select the location 10
Suitable locations 10
Unsuitable locations 11
Orientation 11
3.2 Secure the course computer 12
3.3 Remove the connector cover 12
Connecting cables to the terminals 14
Using the fuses 14
3.4 Attach the power cables 15

Step 4: Install the Compass **17**

4.1 Select the location 18
4.2 Mount the compass 20
4.3 Connect to the course computer 20
4.4 Connecting SeaTalk or NMEA compasses 21

Step 5: Install the Rudder Position Sensor **22**

5.1 Rotary rudder position sensor - installation 22
Introduction 22
Ensuring correct alignment 23
Securing the sensor to the boat 24

www.Busse-Yachtshop.de email: info@busse-yachtshop.de

81173_3.book Page iv Thursday, June 7, 2001 11:51 AM

Attaching the sensor to the tiller arm 24
Checking alignment 25
Connecting to the course computer 25
5.2 Linear rudder position sensor - installation 26
Introduction 26
Mounting 26

Step 6: Install the Drive Unit 28

Step 7: Install the Control Unit 29

Step 8: Clamp the Cables 30

Step 9: Integrate the System 31

9.1 Connecting SeaTalk equipment 32
Possible systems 32
9.2 Connecting NMEA equipment 36
Course computer NMEA inputs/outputs 36
Control unit NMEA inputs 38
SeaTalk/NMEA interface 38
Connecting several items of NMEA equipment 38
9.3 Connecting optional components 40
GyroPlus yaw sensor 40
Handheld remotes 40
External alarm 40
Wind vane (sail boats) 40
Off switch 41
Other manufacturers' drive units 41
9.4 Setting-up the autopilot 42

Maintenance 43

Regular checks 43
Fault-finding 43
Servicing 43
EMC, servicing and safety guidelines 44
Product support 44

Specifications 45

Control unit functionality 46

Glossary 47

Index 49

www.Busse-Yachtshop.de email: info@busse-yachtshop.de

81173_3.book Page v Thursday, June 7, 2001 11:51 AM

About this handbook

Welcome to the installation guide for the Raymarine Type 150/400 autopilot system. This autopilot system will steer your boat to a heading automatically, accurately and reliably.

This handbook explains how to install the parts provided with Type 150, Type 150G, Type 400 and Type 400G autopilot system core packs. The installation process involves the following steps:

1	**Check the Installation Kit**	page 1
2	**Check Locations**	page 6
3	**Install the Course Computer**	page 9
4	**Install the Compass**	page 17
5	**Install the Rudder Position Sensor**	page 22
6	**Install the Drive Unit**	page 28
7	**Install the Control Unit**	page 29
8	**Clamp the Cables**	page 30
9	**Integrate the System**	page 31

At the end of this handbook we have also included:

- maintenance information
- product specifications
- glossary and index
- installation template
- the warranty statement

Note: *This handbook contains important information about the installation and maintenance of your new Raymarine product. To get the best from the product, please read this handbook thoroughly.*

www.Busse-Yachtshop.de email: info@busse-yachtshop.de

81173_3.book Page vi Thursday, June 7, 2001 11:51 AM

Important Information

Warranty

To register your new product, please take a few minutes to fill out the warranty card. It is important that you return the card to the factory to receive full warranty benefits.

Safety notices

WARNING: Product installation

This equipment must be installed and operated in accordance with the instructions contained in this handbook. Failure to do so could result in poor product performance, personal injury and/or damage to your boat.

Because correct performance of the boat's steering is critical for safety, we STRONGLY RECOMMEND that an Authorized Raymarine Service Representative fits this product. You will only receive full warranty benefits if you can show that an Authorized Raymarine Service Representative has installed or commissioned this product.

WARNING: Electrical safety

Make sure the power supply is switched off before you make any electrical connections.

WARNING: Calibration

We supply this product calibrated to default settings. To ensure optimum performance on your boat, this product MUST be calibrated before use. Do NOT use the product until it has been calibrated using the instructions supplied.

WARNING: Navigation aid

Although we have designed this product to be accurate and reliable, many factors can affect its performance. As a result, it should only be used as an aid to navigation and should never replace common sense and navigational judgement. Always maintain a permanent watch so you can respond to situations as they develop.

www.Busse-Yachtshop.de email: info@busse-yachtshop.de

81173_3.book Page vii Thursday, June 7, 2001 11:51 AM

Your Raymarine autopilot will add a new dimension to your boating enjoyment. However, it is the skipper's responsibility to ensure the safety of the vessel at all times by following these basic rules:

- Ensure that someone is present at the helm AT ALL TIMES, to take manual control in an emergency.
- Make sure that all members of crew know how to disengage the autopilot.
- Regularly check for other boats and any obstacles to navigation – no matter how clear the sea may appear, a dangerous situation can develop rapidly.
- Maintain an accurate record of the boat's position by using either a navigation aid or visual bearings.
- Maintain a continuous plot of your boat's position on a current chart. Ensure that the locked autopilot heading will steer the boat clear of all obstacles. Make proper allowance for tidal set – the autopilot cannot.
- Even when your autopilot is locked onto the desired track using a navigation aid, always maintain a log and make regular positional plots. Navigation signals can produce significant errors under some circumstances and the autopilot will not be able to detect these errors.

EMC conformance

All Raymarine equipment and accessories are designed to the best industry standards for use in the recreational marine environment. The design and manufacture of Raymarine equipment and accessories conform to the appropriate Electromagnetic Compatibility (EMC) standards, but correct installation is required to ensure that performance is not compromised.

Handbook information

To the best of our knowledge, the information in this handbook was correct when it went to press. However, Raymarine cannot accept liability for any inaccuracies or omissions it may contain. In addition, our policy of continuous product improvement may change specifications without notice. As a result, Raymarine cannot accept liability for any differences between the product and the handbook.

www.Busse-Yachtshop.de email: info@busse-yachtshop.de

81173_3.book Page viii Thursday, June 7, 2001 11:51 AM

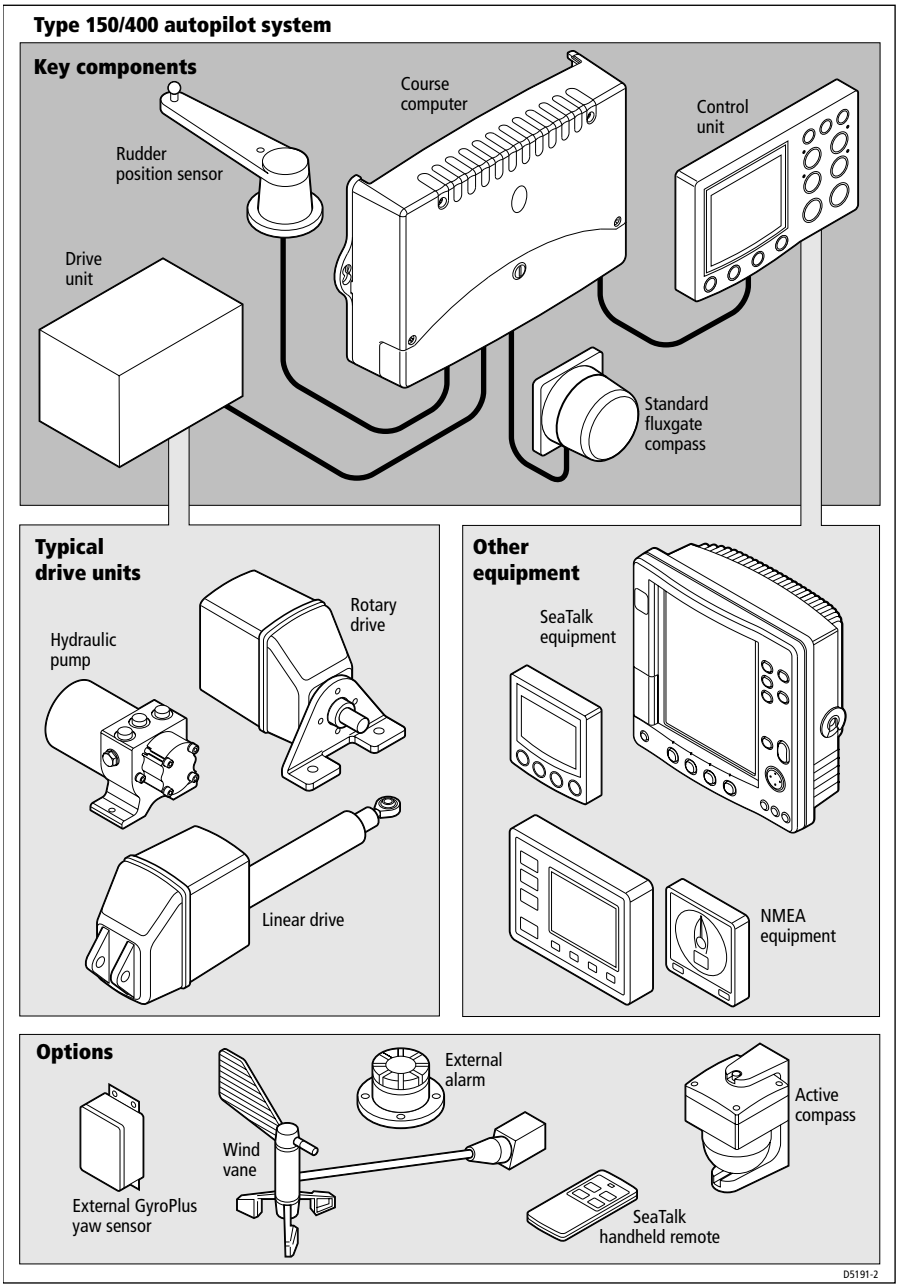

www.Busse-Yachtshop.de email: info@busse-yachtshop.de

81173_3.book Page 1 Thursday, June 7, 2001 11:51 AM

Step 1: Check the Installation Kit

The first step is to get ready for installation by:

- reading through all installation steps
- obtaining the necessary installation tools
- checking the parts supplied

WARNING: Product installation

This equipment must be installed and operated in accordance with the instructions contained in this handbook. Failure to do so could result in poor product performance, personal injury and/or damage to your boat.

Because correct performance of the boat's steering is critical for safety, we STRONGLY RECOMMEND that an Authorized Raymarine Service Representative fits this product. You will only receive full warranty benefits if you can show that an Authorized Raymarine Service Representative has installed or commissioned this product.

1.1 Read this handbook

To prepare for the system installation, read through the following information and the rest of this handbook to familiarize yourself with the autopilot system and how to install it.

The autopilot system – core pack contents

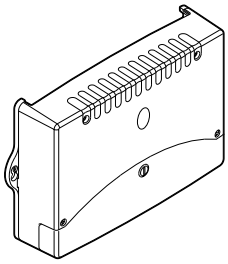

Course computer

The course computer lies at the heart of the autopilot system. It processes information from the sensors in the system (e.g. rudder position and compass) so it can steer the boat using the drive unit:

- it contains a microprocessor, electronic circuitry to control the drive unit and a power amplifier for the drive motor.
- it is the central distribution point for the autopilot system, with terminals to take power from the boat's distribution panel and inputs/outputs for all other autopilot components
- it has inputs/outputs for SeaTalk and NMEA so you can connect it to Raymarine and other manufacturer's equipment.

www.Busse-Yachtshop.de email: info@busse-yachtshop.de

81173_3.book Page 2 Thursday, June 7, 2001 11:51 AM

Course computer versions

Version	Supply voltage	Drive unit compatibility	Built-in GyroPlus*?
Type 150	12 V	All Raymarine Type 1 12 V drives and pumps (including 12 V Constant Running pump).	No
Type 150G	12 V	All Raymarine Type 1 12 V drives and pumps (including 12 V Constant Running pump).	Yes
Type 400	12 V or 24 V	All Raymarine 12 V and 24 V Type 1, Type 2 and Type 3 drives and pumps. Drive voltage must be matched to boat's supply voltage.	No
Type 400G	12 V or 24 V	All Raymarine 12 V and 24 V Type 1, Type 2 and Type 3 drives and pumps. Drive voltage must be matched to boat's supply voltage.	Yes

*Note: The Raymarine GyroPlus yaw sensor measures the boat's yaw (its rate of turn). The autopilot system uses this information to enhance course keeping in adverse weather and sailing conditions (such as sailing downwind in following seas). The Type 150G and Type 400G course computers contain a built-in GyroPlus yaw sensor as standard. The Type 150 and Type 400 course computers do not contain a built-in GyroPlus, but have the option of an external GyroPlus or dealer-fitted internal GyroPlus.

CAUTION:

Before installing the course computer and drive unit, check that they are the correct voltage for your boat's supply.

For course computer installation information, see page 9
For course computer specifications, see page 45

Compass

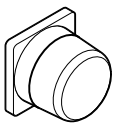

The compass is the direction sensor for the autopilot system. It provides the course computer with precise information about the boat's heading.

Raymarine supplies a **standard fluxgate compass** for the autopilot system.

For more information, see page 17

Rudder position sensor

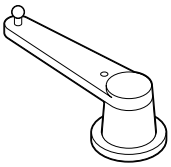

The rudder position sensor (or rudder reference transducer) provides the course computer with the exact position of the boat's rudder.

www.Busse-Yachtshop.de email: info@busse-yachtshop.de

81173_3.book Page 3 Thursday, June 7, 2001 11:51 AM

Raymarine produces two alternative types of rudder sensor:

- the **rotary** rudder position sensor is suitable for all steering systems (apart from 'bullhorn' style hydraulic outboards)
- the **linear** rudder position sensor is specifically designed for 'bullhorn' style hydraulic outboard steering systems

For more information, see page 22

The autopilot system – other key components

Drive unit

The drive unit translates instructions from the course computer into rudder movement, so the course computer can steer the boat. Raymarine produces a wide range of drive units to suit different types of steering systems.

For more information, see page 28

Control unit

The control unit is the your interface with the autopilot system. You can use it to:

- engage and disengage the autopilot
- adjust the boat's course when the autopilot is engaged
- view information about the autopilot system's status and perform a range of other functions

Raymarine produces a range of control units to suit different boats and user requirements.

For more information, see page 29

The autopilot system – extended systems

Around these key components of the autopilot system, you can extend the system by adding options such as:

- connections to additional control units, SeaTalk equipment or other manufacturers' equipment (via NMEA)
- a GyroPlus yaw sensor (if you have a Type 150 or Type 400 course computer without a built-in GyroPlus)

www.Busse-Yachtshop.de email: info@busse-yachtshop.de

81173_3.book Page 4 Thursday, June 7, 2001 11:51 AM

- handheld remotes (the ST600R full-function remote control or the SeaTalk handheld remote control)
- pushpit or masthead wind vanes (for sail boats without a suitable wind instrument)
- an external alarm (through an E85001 interface)

For more information about extended systems, see page 31.

1.2 Obtain installation tools

To install the core pack you will need the following items:

- tape measure (metric/imperial)
- screwdrivers:
  - cross-head/pozi-drive
  - flat-bladed (large and small)
- drill and 3 mm drill bit
- center punch, pencil and masking tape
- for the rudder position sensor:
  - hacksaw
  - small adjustable spanner
  - bolts, nuts and lockwashers (if required for tiller pin)
- for the course computer power supply:
  - suitable power cable (see *page 16*)
  - suitable fuse/circuit breaker (see *page 16*)

Note: *You will also need the tools and equipment required to install the control unit and drive unit. For full details, refer the information supplied with control unit and drive unit.*

1.3 Check parts supplied

Use the diagram on the following page to check the parts supplied.

CAUTION:

Before you start installing the course computer, check that it is the correct voltage for your boat's power and your drive unit.

www.Busse-Yachtshop.de email: info@busse-yachtshop.de

81173_3.book Page 5 Thursday, June 7, 2001 11:51 AM

Core pack – parts supplied

Course computer components

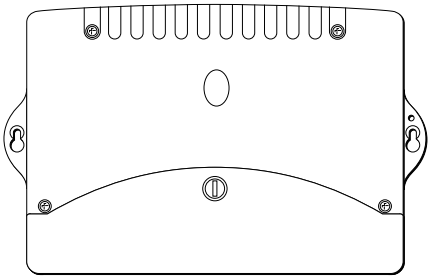

Course computer

No8 x 3/4 inch pan-head self-tapping screws (x5):
- 2 for course computer
- 3 for cable clamp

Ferrite (for power cable)

Cable clamp

Tie-wrap (for cable clamp)

Compass components

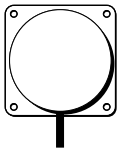

Fluxgate compass with 8 m (26 ft) cable

Compass warning label

No8 x 3/4 inch pan-head self-tapping screws (x4)

Rudder position sensor components

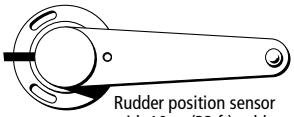

Rudder position sensor with 10 m (32 ft) cable

Tiller pin

Connecting rod (M6), nuts (M6 x2) and ball-pin sockets (x2)

No8 x 3/4 inch pan-head self-tapping screws (x3) for rudder position sensor

No8 x 3/4 inch countersunk self-tapping screws (x2) for tiller pin

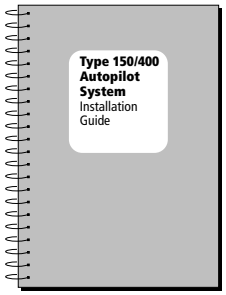

Installation Guide (includes warranty documents and fitting templates)

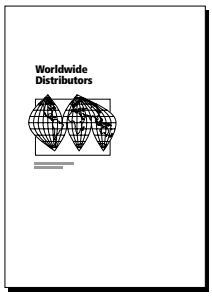

Worldwide Distributor List

Note: This illustration shows the parts supplied with Type 150, 150G, 400 and 400G autopilot core packs.

D5377-1

www.Busse-Yachtshop.de email: info@busse-yachtshop.de

81173_3.book Page 6 Thursday, June 7, 2001 11:51 AM

Step 2

Step 2: Check Locations

2.1 Identify suitable locations

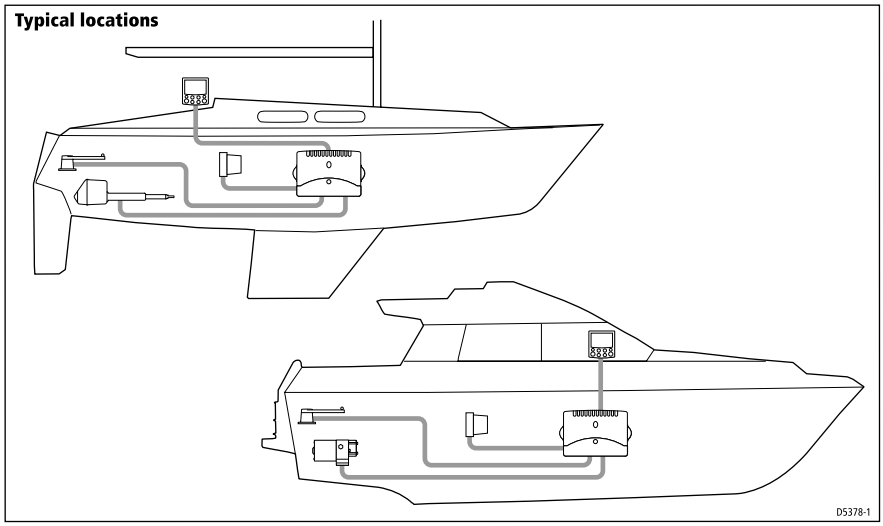

After reading the following EMC installation guidelines (see *page 7*), identify suitable locations for each part of the system.

Course computer location:

- mount vertically on a flat bulkhead below decks
- dry, protected and well-ventilated
- free from high operating temperatures and excessive vibration

For more information, see page 10

Compass location:

- mount vertically, with cable exiting at the base
- as near as possible to the boat's pitch and roll center
- at least 0.8 m (2 ft 6 in) away from the boat's steering compass
- in the back two-thirds of the boat
- away from potential sources of magnetic interference

For more information, see page 18

www.Busse-Yachtshop.de email: info@busse-yachtshop.de

81173_3.book Page 7 Thursday, June 7, 2001 11:51 AM

Rotary rudder position sensor location:

- suitable base alongside the rudder stock and tiller arm.
- so the ball-joints at each end of the connecting rod are level
- so the sensor arm is between 75 mm (3 in) and 310 mm (12 in) from the tiller arm

For more information, see page 23

Drive unit and control unit locations

Refer to the information supplied with these units to identify suitable locations.

Cabling:

- consider how you will run cables to and from each component
- avoid running cables through bilges where possible
- avoid running cables close to fluorescent lights, engines, radio transmitting equipment etc.

Note: *When cutting cables to length, we recommend that you include a loop of extra cable so you can cut and strip the cables a few times in the future (if necessary).*

2.2 EMC installation guidelines

All Raymarine equipment and accessories are designed to the best industry standards for use in the recreational marine environment.

Their design and manufacture conforms to the appropriate Electromagnetic Compatibility (EMC) standards, but correct installation is required to ensure that performance is not compromised. Although every effort has been taken to ensure that they will perform under all conditions, it is important to understand what factors could affect the operation of the product.

The guidelines given here describe the conditions for optimum EMC performance, but it is recognized that it may not be possible to meet all of these conditions in all situations. To ensure the best possible conditions for EMC performance within the constraints imposed by any location, always ensure the maximum separation possible between different items of electrical equipment.

www.Busse-Yachtshop.de email: info@busse-yachtshop.de

81173_3.book Page 8 Thursday, June 7, 2001 11:51 AM

For **optimum** EMC performance, we recommend that **wherever possible**:

- Raymarine equipment and cables connected to it are:
  - At least 3 ft (1 m) from any equipment transmitting or cables carrying radio signals e.g. VHF radios, cables and antennas. In the case of SSB radios, increases the distance to 7 ft (2 m).
  - More than 7 ft (2 m) from the path of a radar beam. A radar beam can normally be assumed to spread 20 degrees above and below the radiating element.
- The equipment is supplied from a separate battery from that used for engine start. Voltage drops below 10 V, and starter motor transients, can cause the equipment to reset. This will not damage the equipment, but may cause the loss of some information and may change the operating mode.
- Raymarine specified cables are used. Cutting and rejoining these cables can compromise EMC performance and must be avoided unless doing so is detailed in the installation manual.
- If a suppression ferrite is attached to a cable, this ferrite should not be removed. If the ferrite needs to be removed during installation it must be reassembled in the same position.

Suppression ferrites

This following illustration shows typical cable suppression ferrites used on Raymarine equipment. Always use the ferrites supplied by Raymarine.

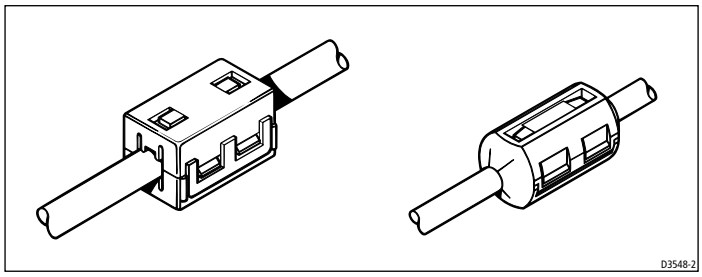

Connections to other equipment

If your Raymarine equipment is to be connected to other equipment using a cable not supplied by Raymarine, a suppression ferrite MUST always be attached to the cable near to the Raymarine unit.

www.Busse-Yachtshop.de email: info@busse-yachtshop.de

81173_3.book Page 9 Thursday, June 7, 2001 11:51 AM

Step 3: Install the Course Computer

Installing the course computer involves these tasks:

3.1	Select the location	page 10
3.2	Secure the course computer	page 12
3.3	Remove the connector cover	page 12
3.4	Attach the power cables	page 15

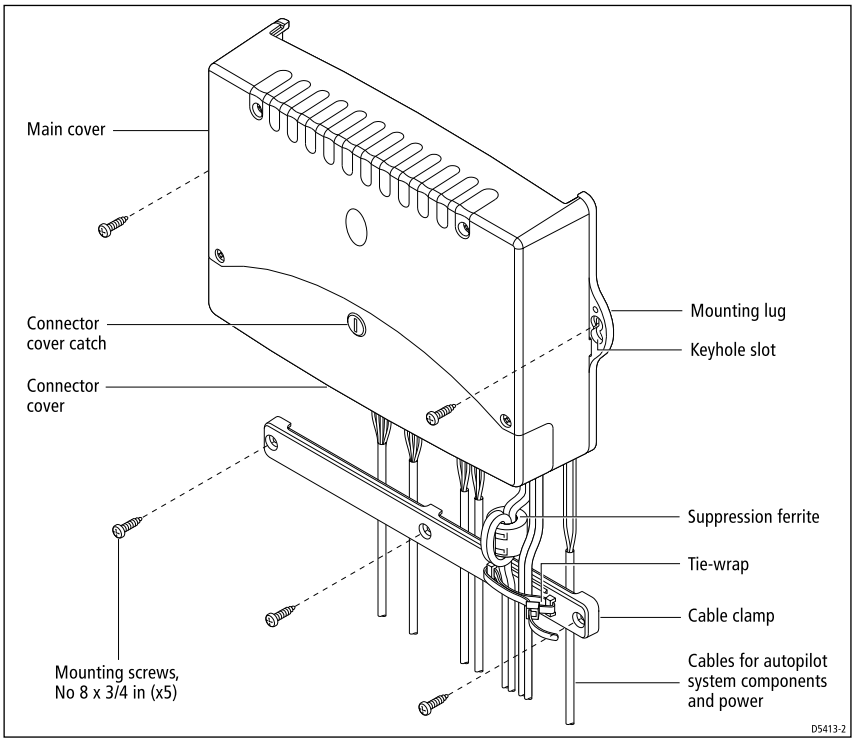

Course computer - main parts

www.Busse-Yachtshop.de email: info@busse-yachtshop.de

81173_3.book Page 10 Thursday, June 7, 2001 11:51 AM

Step 3

3.1 Select the location

Course computer – installation dimensions

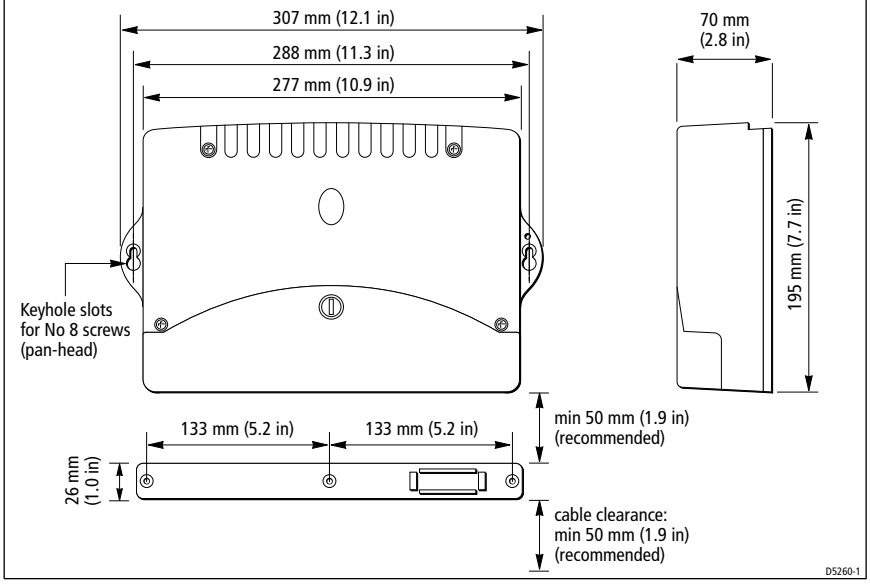

Suitable locations

The course computer is designed to be mounted on a **vertical and flat bulkhead below decks**. Select a location that is:

- dry, protected and well-ventilated
- free from high operating temperatures
- free from excessive vibration
- non-metallic
- accessible for cable routing and sufficiently large to secure the cable clamp under the computer

On sailboats, we also recommend mounting the course computer **across the boat** on a transverse bulkhead.

Notes:

*1. If the only possible location has a metallic surface, you must insulate the base of course computer so it is **not** earthed.*

2. When selecting the mounting location, also refer to the EMC installation guidelines (on page 7).

www.Busse-Yachtshop.de email: info@busse-yachtshop.de

81173_3.book Page 11 Thursday, June 7, 2001 11:51 AM

Unsuitable locations

WARNING:

The course computer is NOT designed to be mounted in engine compartments.

Do NOT install the course computer:

- where there might be flammable vapors (such as in an engine room or compartment, or in a fuel tank bay)
- where there is water splash or spray from bilges or hatches
- where it is at risk from physical damage from heavy items (such as hatch covers, tool boxes, etc.)
- where it might be covered by other equipment

Orientation

CAUTION:

You MUST mount the course computer so it is level and within +/- 10° of the vertical.

The Type 150G and Type 400G course computers contain a built-in GyroPlus yaw sensor that will NOT work correctly if you mount the computer in any other orientation. This orientation also maximizes the air flow to cool the course computer and provides optimum resistance to dripping water.

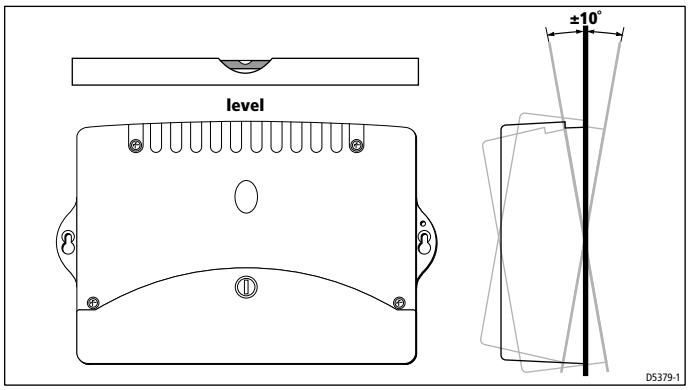

Note: *Type 150G and Type 400G course computers are supplied with a temporary 'Mount vertically' label stuck to the case. Remove this label after installation.*

www.Busse-Yachtshop.de email: info@busse-yachtshop.de

81173_3.book Page 12 Thursday, June 7, 2001 11:51 AM

3.2 Secure the course computer

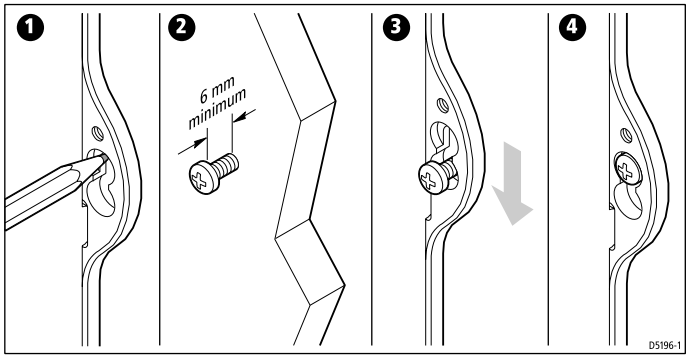

Follow these steps to secure the course computer:

1. Hold the course computer in place against the mounting location so you can mark the centre of the keyhole slots:
   - these marks should be level and 288 mm (11.3 in) apart
   - remove the course computer then drill the two pilot holes using a 3 mm ($^1/_8$ in) drill bit
2. Screw the supplied self-tapping screws (No 8 x $^3/_4$ in, pan-head) into the holes, so the head of each screw is at least 6 mm ($^1/_4$ in) from the surface.
3. Place the keyhole slots over the screw heads, then move the course computer down, so the screw heads are at the top of the keyhole slots.
4. Tighten the screws to hold the course computer securely against the mounting surface.

3.3 Remove the connector cover

To **remove** the connector cover:

- unlock the cover:
  - use a flat-bladed screwdriver or small coin to rotate the catch $^1/_4$ turn (90°) in either direction – until you hear a click and the slot is horizontal
- lift off the cover

www.Busse-Yachtshop.de email: info@busse-yachtshop.de

81173_3.book Page 13 Thursday, June 7, 2001 11:51 AM

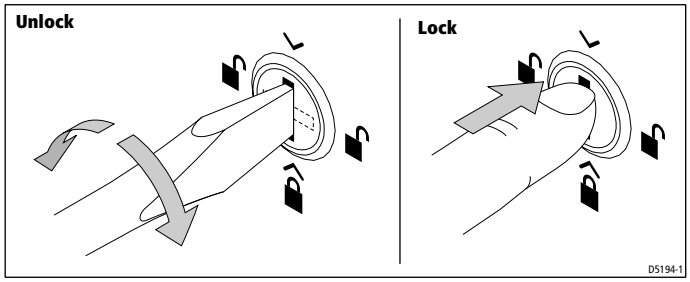

Replacing the connector cover

To **replace** the connector cover:

- fit the cover
- lock the cover:
  - turn the catch so the slot is vertical
  - push in the catch until you hear it click

Course computer inputs, outputs and fuses

When you have removed the connector cover, you will see the course computer inputs, outputs and fuses.

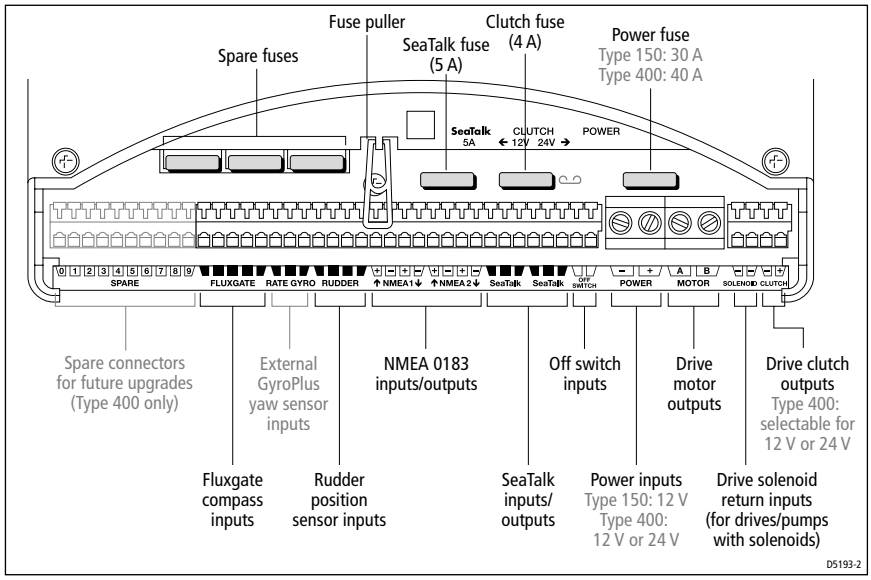

Step 3

www.Busse-Yachtshop.de email: info@busse-yachtshop.de

81173_3.book Page 14 Thursday, June 7, 2001 11:51 AM

Connecting cables to the terminals

Power and Motor terminals

- The **POWER** and **MOTOR** terminals on Type 150/150G course computers accept stranded cable up to 4mm^2 (12 AWG).
- The **POWER** and **MOTOR** terminals on Type 400/400G course computers accept stranded cable up to 10 mm^2 (8 AWG).

To secure cables in these terminals:

- strip 8–10 mm ($^1/_2$ in) of insulation from the end of each cable
- use a small screwdriver to loosen the screw on the terminal block
- insert the stripped cable into the terminal
- tighten the screw

Other terminals

Note: *All other terminals on the course computer will accept stranded cable up to 2.5 mm^2 (14 AWG).*

To secure cables to the other terminals:

- strip at least 5 mm ($^1/_4$ in) of insulation from the end of each cable
- use a small screwdriver to push the small plastic lever on top of the terminal and release the cable clamp
- insert the stripped cable
- release the lever to grip the cable

Using the fuses

The **POWER**, **MOTOR** and **SeaTalk** terminals are fuse protected against short-circuits and misconnections. To change the fuses:

- use the fuse puller (supplied in the case) to remove the fuse
- replace the fuse with an appropriate spare fuse

Note: *The course computer is supplied with three spare fuses fitted in the case. The fuses used in the course computer are standard automotive blade fuses, so you can easily obtain replacement fuses. Your Raymarine dealer can also provide a replacement fuse pack (part number: A18065).*

www.Busse-Yachtshop.de email: info@busse-yachtshop.de

81173_3.book Page 15 Thursday, June 7, 2001 11:51 AM

3.4 Attach the power cables

WARNING: Electrical safety

Make sure the power supply is switched off before you make any electrical connections.

Follow these steps to provide power to the course computer:

1. Measure the total length of cable run from the boat's distribution panel to the course computer, then use *Table 3-1* to identify the appropriate cable size.

Note: *When selecting power cable you* ***must*** *use the gauge specified in Table 3-1. If in doubt, use a heavier gauge cable than specified. A lighter gauge cable might cause a voltage drop between the supply and the course computer. This could cause the course computer to malfunction and will reduce the power supplied to the drive unit.*

2. Route the cables back to the course computer, taking into account the EMC installation guidelines (*page 7*).
3. Install a circuit breaker or fuse on the power supply to suit the drive unit connected to your autopilot system (see *Table 3-2*).
4. Connect the cables to the **POWER** inputs on the course computer.
5. Attach the suppression ferrite (supplied) around both the positive and negative power cables, between the cable clamp and course computer. When you attach the ferrite, you must loop both power cables so that the ferrite encloses **two passes of each cable**. Secure the ferrite with the small tie-wrap (supplied).

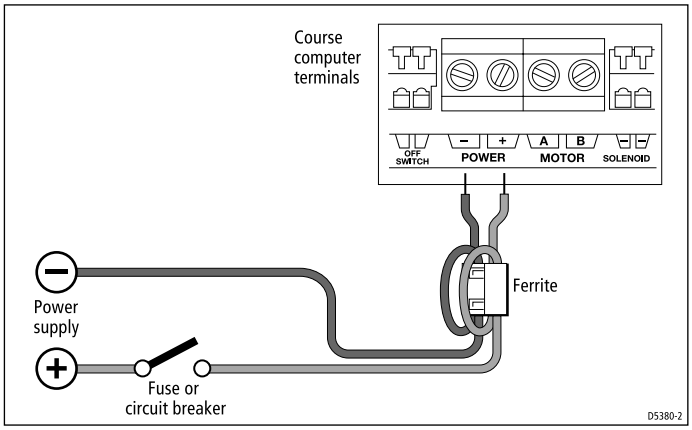

Course computer – connecting power supply

Step 3

www.Busse-Yachtshop.de email: info@busse-yachtshop.de

81173_3.book Page 16 Thursday, June 7, 2001 11:51 AM

Table 3-1: Recommended power supply cable sizes (stranded cables)

Cable length (distribution panel to course computer)	**Cable gauge** (AWG)	**Copper area** (mm^2)
Type 1 drive 12/24 V; I/O drive; CR pump solenoids*		
up to 3m (10ft)	14 AWG	2.5 mm^2
up to 5m (16ft)	12 AWG	4 mm^2
up to 7m (23ft)	10 AWG	6 mm^2
up to 10m (32ft)	8 AWG	10 mm^2
up to 16m (52ft)	6 AWG	16 mm^2
Type 2 drive 12 V		
up to 5m (16ft)	10 AWG	6 mm^2
up to 7m (23ft)	8 AWG	10 mm^2
up to 16m (52ft)	6 AWG	16 mm^2
Type 2 drive 24 V		
up to 3m (10ft)	12 AWG	4 mm^2
up to 5m (16ft)	10 AWG	6 mm^2
up to 10m (32ft)	8 AWG	10 mm^2
up to 16m (52ft)	6 AWG	16 mm^2
Type 3 drive 12 V		
up to 5m (16ft)	8 AWG	10 mm^2
up to 7m (23ft)	6 AWG	16 mm^2
up to 16m (52ft)	4 AWG	25 mm^2
Type 3 drive 24 V		
up to 5m (16ft)	10 AWG	6 mm^2
up to 7m (23ft)	8 AWG	10 mm^2
up to 16m (52ft)	6 AWG	16 mm^2

Table 3-2: Recommended power cable fuse and circuit breaker sizes

Drive unit	**Fuse** (Amps)	**Thermal over-current circuit breaker** (Amps)
Rotary, linear, hydraulic pump, hydraulic linear		
Type 1: 12 V and 24 V	25 A	20 A
Type 2: 12 V	40 A	30 A
Type 2: 24 V	30 A	30 A
Type 3: 12 V and 24 V	40 A	30 A
I/O drive	15 A	10 A
CR pump solenoids*	10 A	10 A

* These specifications apply to the cabling for CR pump **solenoids**. Power the CR pump **motor** separately, as specified in the CR pump installation guide.

www.Busse-Yachtshop.de email: info@busse-yachtshop.de

81173_3.book Page 17 Thursday, June 7, 2001 11:51 AM

Step 4: Install the Compass

This section provides installation instructions for the standard Raymarine **fluxgate** compass (supplied in the core pack). This involves the following tasks:

4.1	Select the location	page 18
4.2	Mount the compass	page 20
4.3	Connect to the course computer	page 20

Note: *This section also provides information about connecting other SeaTalk or NMEA compasses to the course computer (see page 21).*

Compass description and dimensions

The compass contains a self-levelling mechanism. This enables the compass to provide accurate readings with pitch and roll movements up to +/- 35°.

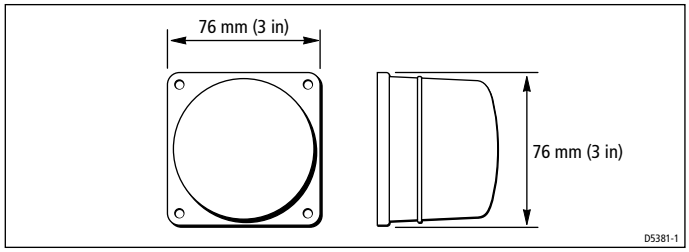

Fluxgate compass dimensions

Note: *The rattle that the fluxgate compass makes when shaken is normal. It is caused by the pendulum weight hitting the inside of the case.*

www.Busse-Yachtshop.de email: info@busse-yachtshop.de

81173_3.book Page 18 Thursday, June 7, 2001 11:51 AM

4.1 Select the location

The compass is primarily designed for mounting below deck on a bulkhead. On steel-hulled boats you must mount it above deck.

Standard location

To achieve the best performance from the compass, mount it:

- as near as possible to the boat's pitch and roll center to minimize compass disturbance
- at least 0.8 m (2 ft 6 in) away from the boat's steering compass to prevent deviation of either compass
- away from the front third of the boat (otherwise shock motion will affect compass performance)
- away from potential sources of magnetic interference, such as: motors, drive units, loudspeakers, alternators/starters, electric cables, large ferrous objects (such as engines, ballast, keel, gas bottles and tool boxes)

Note: *Because you align the compass after installation (see the control unit handbook), you can mount it so it faces in any direction.*

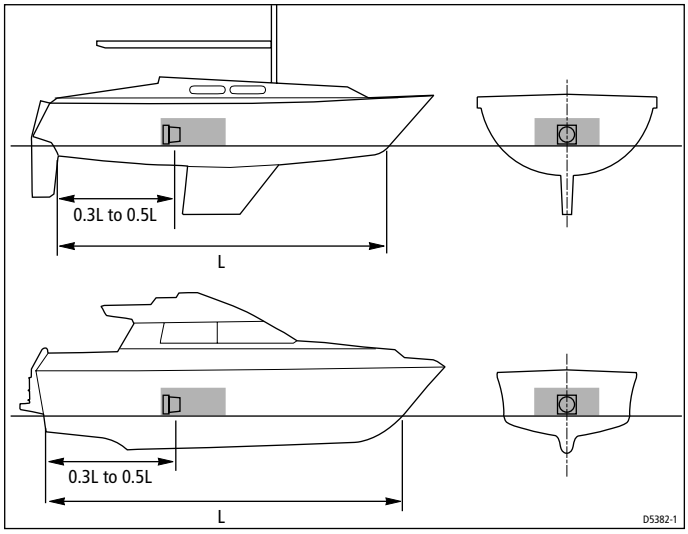

Compass - recommended location for non-steel hulls

www.Busse-Yachtshop.de email: info@busse-yachtshop.de

81173_3.book Page 19 Thursday, June 7, 2001 11:51 AM

Finding the most suitable location

To identify the best compass location on your boat, start at the pitch and roll center then move the compass up and/or aft until you find a location with minimal magnetic disturbance.

Note: *To check if the intended mounting location is free from magnetic influence, tape a handheld compass to the chosen location, then turn the boat through 360°. The readings on the handheld compass and your boat's main steering compass (if accurately aligned) should not differ by more than10° at any heading.*

Steel-hulled boats

On steel-hulled boats you must mount the compass at least 1 m (3 ft) above the main deck or wheelhouse. Otherwise the compass will not work correctly because the hull will prevent it from sensing the Earth's magnetic field. The following diagram shows recommended mounting positions for steel-hulled boats.

Note: *The higher above the waterline you mount the compass, the more the boat's pitch and roll will affect compass performance.*

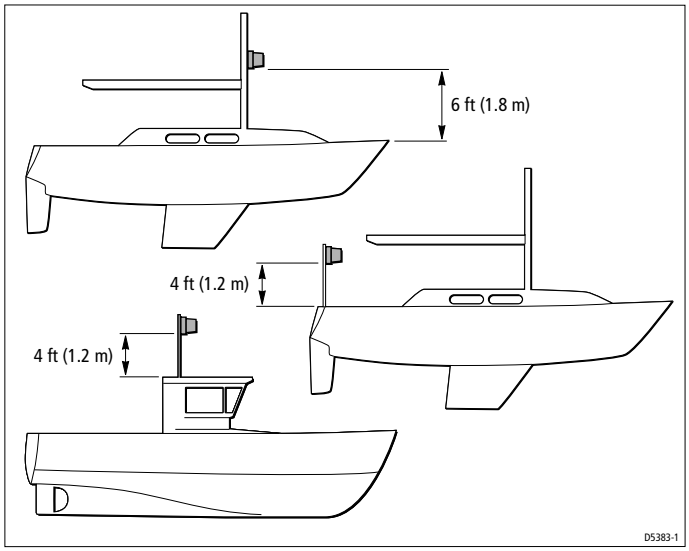

Compass - recommended location for steel-hulled boats

www.Busse-Yachtshop.de email: info@busse-yachtshop.de

81173_3.book Page 20 Thursday, June 7, 2001 11:51 AM

4.2 Mount the compass

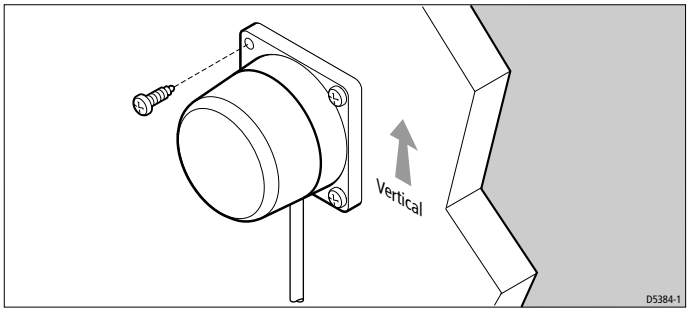

Fluxgate compass - orientation

Step 4

CAUTION:
You must mount the fluxgate compass vertically, with the cables exiting at the base.

1. Hold the compass against the mounting location.
2. Mark the four mounting holes, then remove the compass.
3. Drill four pilot holes using a 3 mm ($^1/_8$ in) drill bit.
4. Making sure the cable exits at the bottom of the compass, secure the fluxgate compass using the self-tapping screws provided (No 8 x $^3/_4$ in, pan-head).

Note: *Stick the supplied warning label near to the compass, where it is clearly visible.*

4.3 Connect to the course computer

1. The compass is supplied with 8 m (26 ft) of cable. Route the cable to the course computer, taking into account the EMC installation guidelines (*page 7*).

Note: *Make sure you leave some spare cable so, if necessary, you can re-position the compass to reduce deviation. If the standard cable is not long enough, your Raymarine dealer can supply a 10 m (30 ft) extension cable (part number: D174)*

2. Connect the five cores of the cable to the **FLUXGATE** terminals on the course computer (as shown).

www.Busse-Yachtshop.de email: info@busse-yachtshop.de

81173_3.book Page 21 Thursday, June 7, 2001 11:51 AM

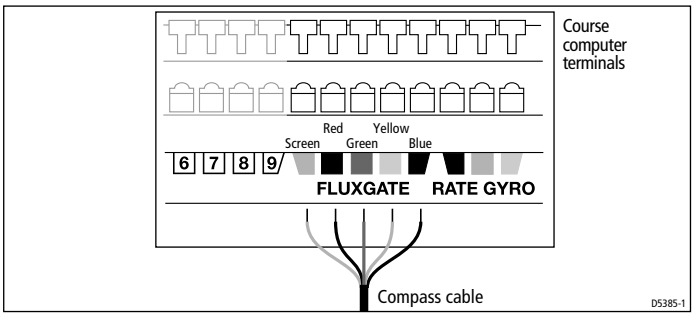

4.4 Connecting SeaTalk or NMEA compasses

You can connect SeaTalk or NMEA compasses to the course computer, either to replace the fluxgate compass or provide supplementary compass signals.

When you connect more than one compass to the autopilot system, the course computer processes their signals in this order of priority:

1. Fluxgate compass
2. NMEA compass
3. SeaTalk compass

This means that if you want to use a NMEA compass as the primary compass, you need to disconnect the fluxgate compass.

To connect a SeaTalk or NMEA compass to the autopilot system:

- **NMEA compass**: connect it to one set of NMEA inputs on the course computer
- **SeaTalk compass**: connect it to the SeaTalk bus or the course computer SeaTalk terminals

www.Busse-Yachtshop.de email: info@busse-yachtshop.de

81173_3.book Page 22 Thursday, June 7, 2001 11:51 AM

Step 5: Install the Rudder Position Sensor

Note: *Your autopilot system* ***must*** *include either a rotary or linear rudder position sensor, otherwise it will not function.*

Refer to the following installation instructions to fit either a rotary or linear rudder position sensor:

5.1	Rotary rudder position sensor - installation	page 22
5.2	Linear rudder position sensor - installation (on 'bullhorn' style hydraulic outboards only)	page 26

5.1 Rotary rudder position sensor - installation

Introduction

The **rotary** rudder position sensor is suitable for all steering systems apart from 'bullhorn' style hydraulic outboards (which require a linear rudder position sensor - see *page 26*). The rotary rudder position sensor connects directly to the boat's tiller arm or quadrant.

Installing the sensor involves five main tasks:

- ensuring correct alignment
- securing the sensor to the boat
- attaching the sensor to the tiller arm
- checking alignment
- connecting to the course computer

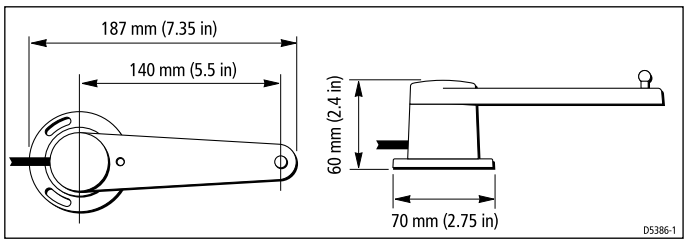

Rudder position sensor - dimensions

www.Busse-Yachtshop.de email: info@busse-yachtshop.de

81173_3.book Page 23 Thursday, June 7, 2001 11:51 AM

Ensuring correct alignment

CAUTION:

Take care to ensure correct rudder sensor alignment. If the sensor is not correctly aligned, the autopilot system will not perform accurately.

Vertical alignment

When viewed from the front of the boat, the connecting rod should:

- be as level as possible, so the ball-joints at each end are level
- remain parallel to the tiller arm's plane of rotation at all times

Note: *If misalignment exceeds +/-5° the ball-joints will bind or fail.*

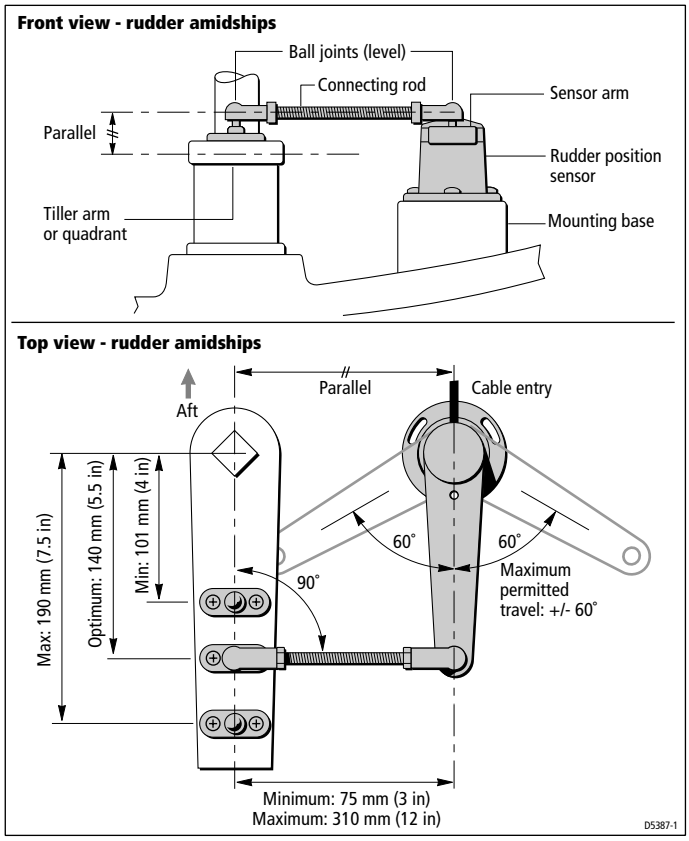

Step 5

www.Busse-Yachtshop.de email: info@busse-yachtshop.de

81173_3.book Page 24 Thursday, June 7, 2001 11:51 AM

Horizontal alignment

When viewed from above (as shown in the previous illustration):

- the sensor arm must be between 75 mm (3 in) and 310 mm (12 in) from the tiller arm
- with the rudder amidships, the sensor arm should be at 90° to the connecting rod and directly opposite the cable entry point on the sensor body
- when the rudder moves from hardover to hardover:
  - the sensor arm and the tiller arm must remain parallel to each other at all times
  - sensor arm movement must not exceed +/- 60°: the rudder position sensor may be damaged if the steering system drives the sensor arm beyond these limits onto its end stops

Securing the sensor to the boat

Mount the rudder position sensor on a suitable base alongside the rudder stock and tiller arm:

1. Hold the sensor in place, mark the mounting holes, then remove the sensor. (If required, use the template at the back of the book.)
2. Drill the pilot holes using a 3 mm ($^1/_8$ in) drill bit.
3. Attach the sensor to the mounting base using the self-tapping screws supplied (No 8 x $^3/_4$ inch, pan-head).

Note: *To make **minor** adjustments to the sensor alignment, loosen the screws, rotate the sensor body, then re-tighten the screws.*

Attaching the sensor to the tiller arm

Attaching the tiller pin to the tiller arm

1. For optimum performance, mount the tiller pin on the tiller arm 140 mm (5.5 in) from the rudder stock.

Note: *If necessary, you can fit the tiller pin anywhere between 101 mm (4 in) and 190 mm (7.5 in) from the rudder stock. This will not affect autopilot performance, but will slightly alter the scaling of the rudder angle display shown on the control unit.*

2. Hold the tiller pin in place on the tiller arm, mark the mounting holes then remove the tiller pin. You can mount the tiller pin so it is aligned either along or across the tiller arm.

www.Busse-Yachtshop.de email: info@busse-yachtshop.de

81173_3.book Page 25 Thursday, June 7, 2001 11:51 AM

3. Drill pilot holes using a 3 mm ($^1/_8$ in) drill bit.
4. Attach the tiller pin to the tiller arm using the two self-tapping screws supplied (No 8 x $^3/_4$ inch, countersunk) or suitable bolts, nuts and lock washers.

Attaching the connector rod

1. Use a hacksaw to cut the threaded connector rod to length.
2. Screw the lock nuts onto the rod and then the ball-pin sockets.
3. Press the sockets onto the pins on the sensor arm and tiller pin.

Note: *To give the precise rudder position, the rudder sensor has a built-in spring to remove any free play in the linkage to the tiller.*

Checking alignment

Move the rudder from hardover to hardover and check that at all rudder angles:

- all moving parts of the sensor remain free from any obstructions
- the sensor and connecting rod remain accurately aligned
- the ball joints do not bind

Connecting to the course computer

1. The rudder sensor is supplied with 10 m (32 ft) of cable. Route the cable to the course computer, taking into account the EMC installation guidelines (see *page 7*).
2. Connect to the **RUDDER** terminals on the course computer.

Note: *If you have mounted the rudder sensor upside down, you will need to swap the red and green connections at the course computer.*

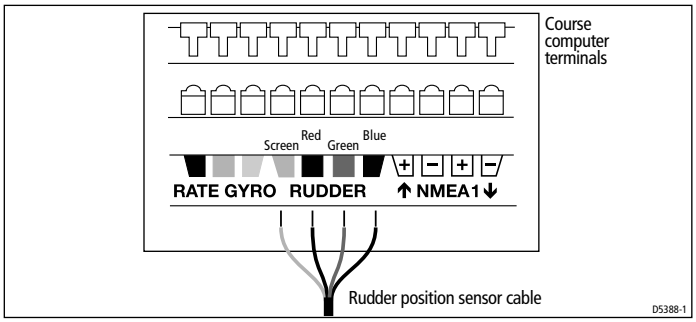

Rudder position sensor - connecting to course computer

www.Busse-Yachtshop.de email: info@busse-yachtshop.de

81173_3.book Page 26 Thursday, June 7, 2001 11:51 AM

5.2 Linear rudder position sensor - installation

Introduction

The **linear** rudder position sensor (part number: M81188) is designed for 'bullhorn' style hydraulic outboard steering systems. It is totally weatherproof and designed to be mounted on the bullhorn ram.

Note: *You **must** use the linear rudder position sensor on all hydraulic outboard installations.*

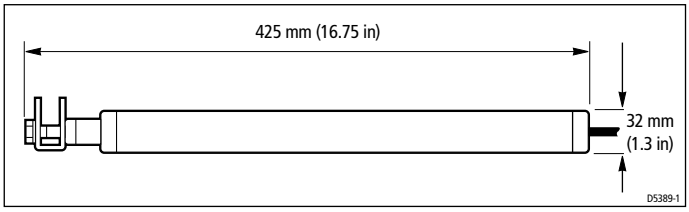

Linear rudder position sensor - dimensions

Mounting

Step 5

1. Use the steering system to position the bullhorn ram amidships.
2. If necessary, release the hydraulic pressure from the boat's hydraulic steering system

Note: *Contact your steering gear manufacture for advice on this step, and follow their instructions for releasing the hydraulic pressure.*

3. Loosen the starboard bolt that secures the bullhorn ram's shaft to the end bracket.
4. Fit the U-bracket (supplied) over the end bracket and the bullhorn ram's shaft.
5. Hand tighten the starboard bolt to hold the U-bracket in place.
6. Fully open the hose clamps (supplied) using a flat bladed screwdriver, then hang them over the bullhorn ram.
7. Place the spacers (supplied) on the bullhorn ram and use adhesive tape to secure them temporarily.
8. Pull out the rudder sensor's shaft until its alignment mark is level with the end of the barrel.
9. Position the rudder sensor against the spacers so the threaded rod end of its shaft passes through the U-bracket.

www.Busse-Yachtshop.de email: info@busse-yachtshop.de

81173_3.book Page 27 Thursday, June 7, 2001 11:51 AM

10. Tighten the hose clamps around the bullhorn ram and the rudder sensor's barrel.
11. Tighten the starboard bullhorn bolt to secure the U-bracket.
12. Fit and tighten the supplied nut and washer to secure the threaded rod end of the sensor's shaft to the U-bracket.

Note: *We recommend installing the sensor with its shaft pointing to starboard. If you cannot install the unit in this orientation, you can fit it with the shaft pointing to port. If you do this, swap the red and green connections at the course computer.*

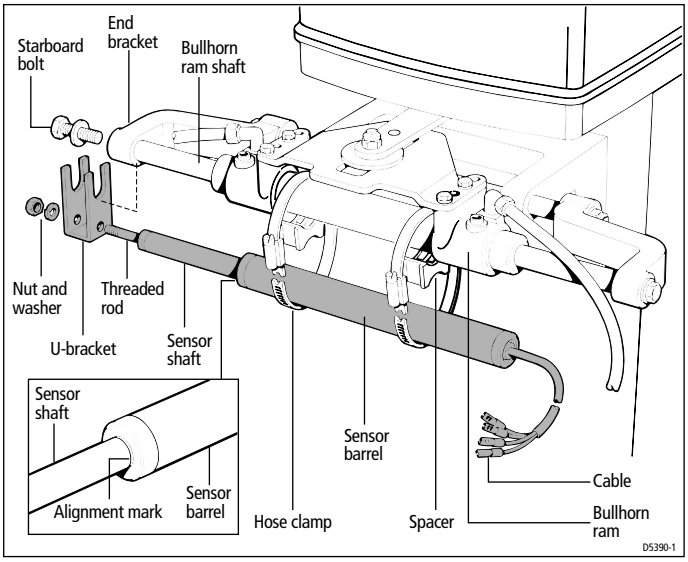

Linear rudder position sensor - installation

Connecting to the course computer

1. Route the cable to the course computer, taking into account the EMC installation guidelines (*page 7*).
2. Connect to the **RUDDER** terminals on the course computer (refer to the illustration on *page 25*).

Note: *To allow for the bullhorn's movement, leave a loop of cable at the end of the linear rudder position sensor. If the standard cable is not long enough, your Raymarine dealer can supply a 10 m (30 ft) extension cable (part number: D173).*

www.Busse-Yachtshop.de email: info@busse-yachtshop.de

81173_3.book Page 28 Thursday, June 7, 2001 11:51 AM

Step 6: Install the Drive Unit

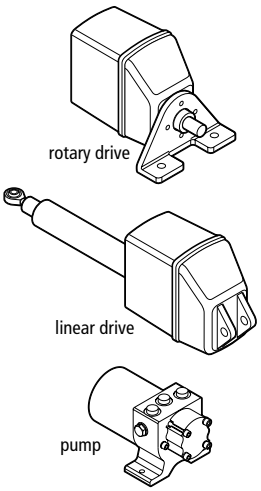

Raymarine produces a wide range of drive units to suit different types of steering systems:

- The **rotary drive** is designed for steering systems that can be driven from the helm position through a chain and sprockets.
- The **linear** and **hydraulic linear drives** are designed for boats with existing mechanical steering systems, and drive the rudder directly. The hydraulic linear drive is suitable for larger boats and heavier duty steering applications.
- The **hydraulic pump** and **constant running hydraulic pump** (CR pump) are primarily designed for boats with existing hydraulic steering systems. Alternatively, you can use them in combination with a secondary steering ram on boats with mechanical steering. The CR pump is suitable for larger boats and heavier duty steering applications.
- The **I/O drive** (the Inboard/Outboard or stern drive) is designed to drive cable operated, power assisted outboard steering systems.

To control a Raymarine drive or pump, connect it to the motor terminals on the course computer (and clutch terminals where necessary). For Raymarine CR pumps, connect the solenoids to the motor and solenoid terminals on the course computer.

➔ For full information, see the installation guide packed with the drive.

➔ If you are connecting a non-Raymarine drive unit, see page 41.

www.Busse-Yachtshop.de email: info@busse-yachtshop.de

81173_3.book Page 29 Thursday, June 7, 2001 11:51 AM

Step 7: Install the Control Unit

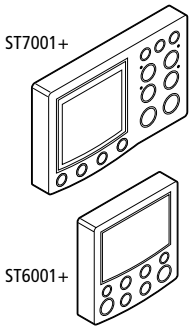

Raymarine produce a range of control units to suit different boats and user requirements.

The ST6001+ and ST7001+ control units have been designed specifically to provide access to all advanced functions on the Type 150, 150G, 400 and 400G course computes.

You can also use the following control units to operate the course computer autopilot system, but they do not enable access to some of its more advanced functions:

- ST6000+ control unit
- ST7000+ control unit
- ST600R remote control unit
- ST80 autopilot keypad (as part of an ST80 instrument system)
- RayPilot 650 control unit
- ST6000 and ST7000 control units

For full information about control unit functionality, see page 46.

Connecting to the course computer

If your system only includes a single control unit, connect it to one set of SeaTalk terminals on the course computer.

For full information, refer to the control unit owner's handbook.

If you are connecting more than one control unit or a combination of control units and SeaTalk instruments/equipment, see page 32 of this handbook.

www.Busse-Yachtshop.de email: info@busse-yachtshop.de

81173_3.book Page 30 Thursday, June 7, 2001 11:51 AM

Step 8: Clamp the Cables

When you have connected all autopilot system components to the course computer, we recommend that you use the supplied cable clamp to relieve any strain on the cable connections.

Secure the cables with the cable clamp as follows:

1. Hold the cable clamp in place below the course computer, making sure:
   - its center hole is below the center of the course computer (i.e. in line with the connector cover catch)
   - it is between at least 50 mm (2 in) from the bottom of the course computer
   - the hole locations are clear of any cables
2. Mark the position of the three holes, then remove the cable clamp.
3. Drill the three pilot holes using a 3 mm ($^1/_8$ in) drill bit.
4. Secure the cable clamp using the self-tapping screws supplied (No 8 x $^3/_4$ in, pan-head), making sure:
   - the tie-wrap securing loops are on the right (below the **POWER** and **MOTOR** terminals on the course computer)
   - the clamp securely holds all cables
   - the legs on cable clamp do not pinch any of the cables

Note: *If the power and/or motor cables are larger than 5 mm ($^1/_4$ in) diameter, secure them on top of the cable clamp with the tie-wrap supplied. Make sure the tie-wrap sits above the cables (as shown below), so it pulls the cables against the clamp when tightened.*

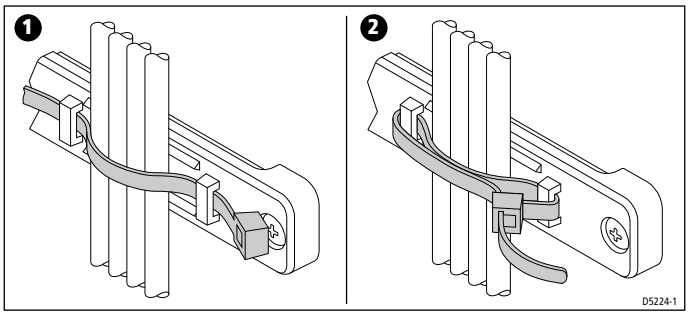

Step 8

www.Busse-Yachtshop.de email: info@busse-yachtshop.de

81173_3.book Page 31 Thursday, June 7, 2001 11:51 AM

Step 9: Integrate the System

This section explains how to connect the autopilot to other equipment and integrate the system:

9.1	Connecting SeaTalk equipment	page 32
9.2	Connecting NMEA equipment	page 36
9.3	Connecting optional components	page 40
9.4	Setting-up the autopilot	page 42

Note: *Before connecting other equipment, read the EMC installation guidelines (see page 7).*

www.Busse-Yachtshop.de email: info@busse-yachtshop.de

81173_3.book Page 32 Thursday, June 7, 2001 11:51 AM

9.1 Connecting SeaTalk equipment

You can use SeaTalk to connect the autopilot system to:

- **additional SeaTalk control units**: you can use any control units to operate the autopilot and view autopilot information
- **SeaTalk equipment** (such as wind, navigation, radar and GPS):
  - the autopilot system can use information from this equipment to enhance course keeping and provide additional features (such as waypoint navigation)
  - you can also display information from the SeaTalk equipment on the autopilot control unit

Possible systems

When connecting SeaTalk equipment, you have a range of options depending on whether you want to:

- provide an 'isolated' control unit (for systems with more than one control unit – see next page)
- provide power separately to the course computer and main SeaTalk bus

The following illustrations show some typical ways to connect simple SeaTalk systems.

CAUTION:

If your autopilot system includes more than one control unit, we strongly recommend connecting the main control unit to one course computer SeaTalk port and the additional control unit(s) to the other SeaTalk port. This will mean that if either SeaTalk system fails, you will still have one operational control unit.

Single control unit, single power supply

The simplest type of system has the course computer providing power to a single SeaTalk system that includes a single control unit and several instruments.

www.Busse-Yachtshop.de email: info@busse-yachtshop.de

81173_3.book Page 33 Thursday, June 7, 2001 11:51 AM

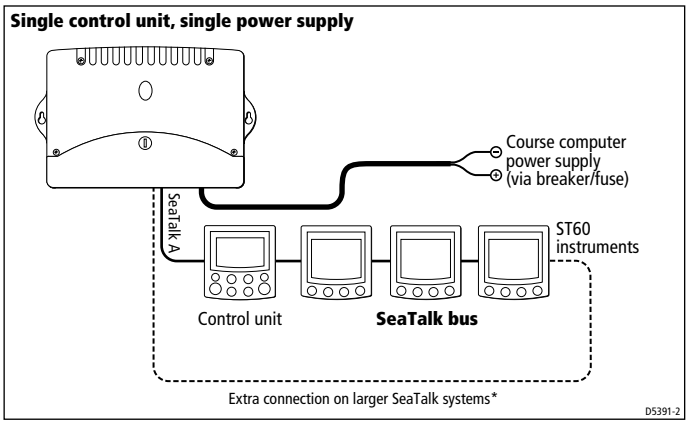

Isolated control unit, single power supply

If you have two control units, we recommend that you connect one to each SeaTalk terminal. In the following illustration:

- the course computer provides power to the SeaTalk system
- one control unit is connected on its own to SeaTalk A so it is isolated against any possible failure of SeaTalk B

If the SeaTalk B line fails, the isolated control unit will switch to Standby mode as a safety measure. By pressing **auto** on the isolated control unit you can regain full autopilot control.

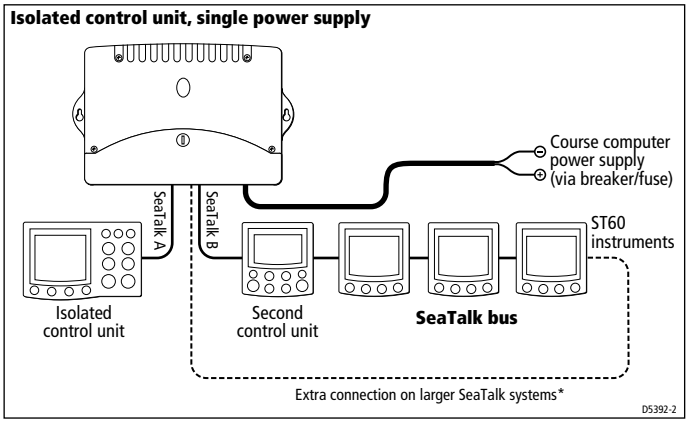

* Note: Depending on the number of SeaTalk units and the total length of SeaTalk cabling, you may need to provide power supply to each end of the SeaTalk bus ('ring-main' style). Refer to the instrument handbook for more information.

www.Busse-Yachtshop.de email: info@busse-yachtshop.de

81173_3.book Page 34 Thursday, June 7, 2001 11:51 AM

Separate course computer and instrument power

Another option is to provide separate power supplies to the course computer and SeaTalk system so you can have independent, switched instrument and pilot systems.

On the illustrated example, the behavior of the control unit on SeaTalk A depends on whether you connect the red SeaTalk wire to the SeaTalk B terminal:

- if the red wire is not connected, the control unit does not power up when the course computer power is off
- if the red wire is connected, the control unit shows a PILOT OFF or NO LINK message when the course computer power is off (as it will still receive power from the SeaTalk B line)

Separate course computer and instrument power supplies

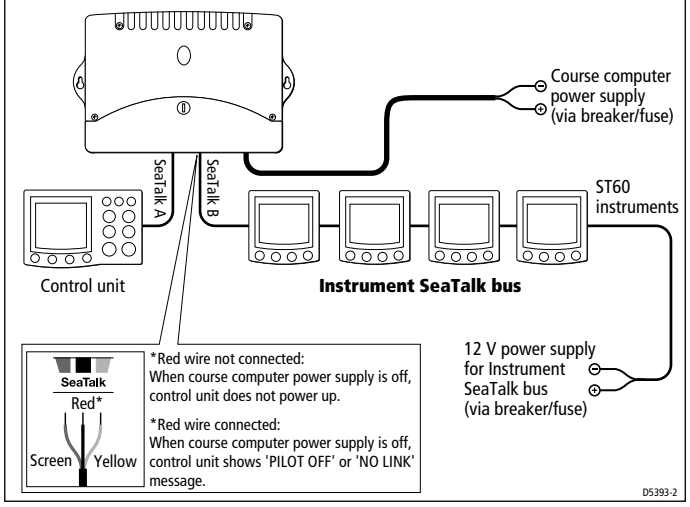

Typical larger boat system

The following illustration shows a typical system layout for a Type 150G or Type 400G course computer on a larger boat. It has:

- separate course computer and SeaTalk power supplies
- an isolated control unit on SeaTalk A
- a NMEA 1 output so the radar/chartplotters can use the fast heading output from the course computer to enable MARPA (see *page 37*)

Step 9

www.Busse-Yachtshop.de email: info@busse-yachtshop.de

81173_3.book Page 35 Thursday, June 7, 2001 11:51 AM

Typical larger boat system

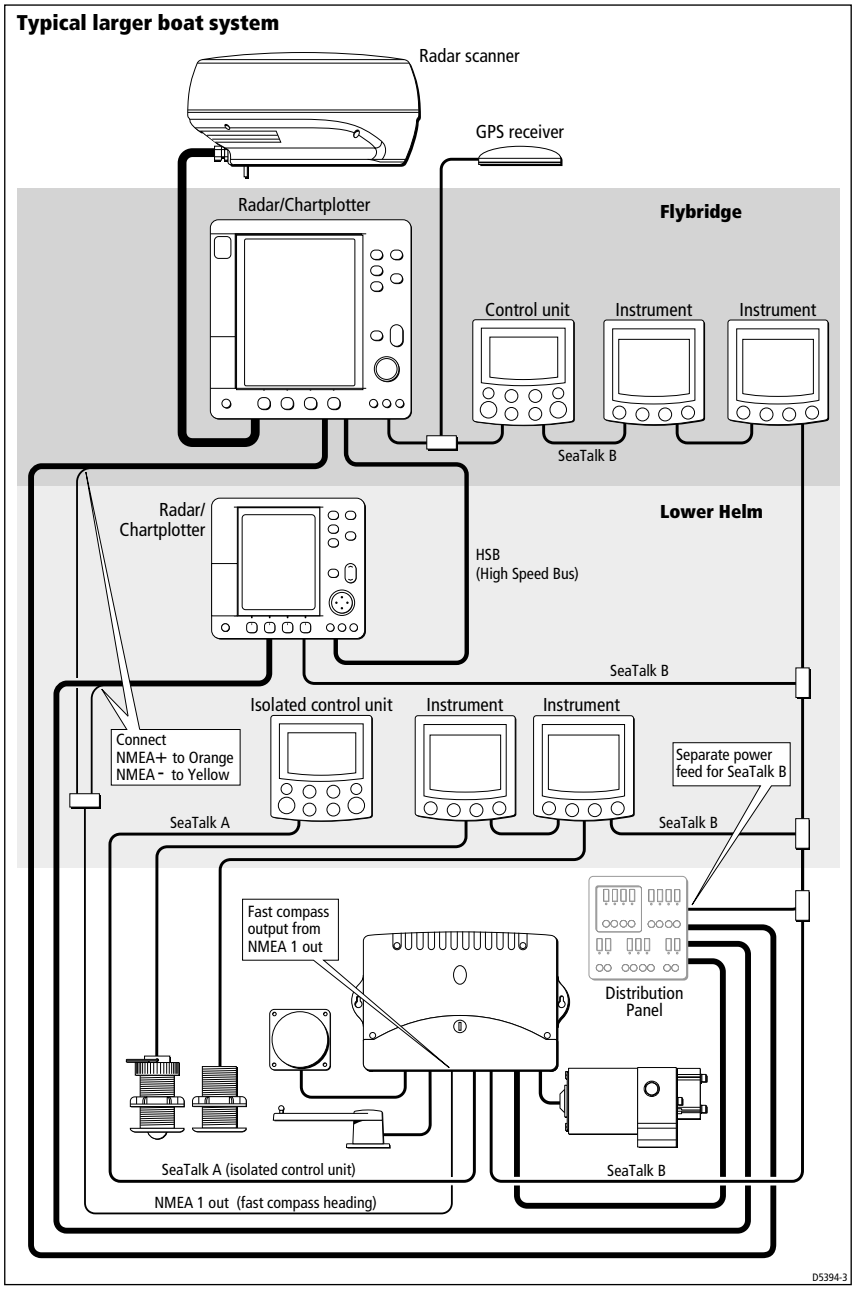

Step 9

www.Busse-Yachtshop.de email: info@busse-yachtshop.de

81173_3.book Page 36 Thursday, June 7, 2001 11:51 AM

9.2 Connecting NMEA equipment

If you have equipment on your boat that transmits NMEA 0183 data (e.g. GPS), you can connect this equipment to the autopilot system. You can connect the NMEA equipment in any combination of these ways:

- using the course computer NMEA inputs/outputs
- using the NMEA inputs on the back of either the ST6001+ or ST7001+ control units (if your installation includes one of these control units)
- using the SeaTalk/NMEA interface (part number: E85001) to convert the NMEA data to SeaTalk data

WARNING: Connections to other equipment

If you are connecting Raymarine equipment to other equipment using a non-Raymarine cable, you MUST attach an appropriate suppression ferrite to the cable near to the Raymarine unit.

Course computer NMEA inputs/outputs

Note: *Do NOT connect more than one piece of equipment to each of the course computer NMEA inputs.*

The course computer has two sets of NMEA inputs/outputs to receive and transmit information from NMEA equipment. The course computer decodes and transmits the following NMEA data:

Course computer NMEA 1 and 2 inputs	
NMEA 0183 received	**Information extracted**
APB	cross track error, bearing to waypoint, waypoint number
BWC BWR	bearing to waypoint, distance to waypoint, waypoint number, time
GGA GLL	latitude/longitude, time
HDG HDM HDT	heading
MWV	apparent wind angle, apparent wind speed
RMA	course over ground (COG), speed over ground (SOG), latitude/longitude, variation

www.Busse-Yachtshop.de email: info@busse-yachtshop.de

81173_3.book Page 37 Thursday, June 7, 2001 11:51 AM

Course computer NMEA 1 and 2 inputs	
NMEA 0183 received	**Information extracted**
RMB	cross track error, bearing to waypoint, distance to waypoint, waypoint number
RMC	course over ground (COG), speed over ground (SOG), latitude/longitude, time, variation
VHW	speed through water, heading
VTG	course over ground (COG), speed over ground (SOG)
VWR	relative apparent wind angle, relative apparent wind speed
XTE	cross track error
ZDA	time, date

Note: When connected to a NMEA navigator, the course computer looks at NMEA 1 first. If NMEA 1 has no data, the course computer looks at NMEA 2. If both channels have the same type of navigation data, the course computer uses NMEA 1.

Course computer NMEA 1 output*	
NMEA 0183 transmitted	**Information sent**
HDM	heading

*** Note:** Type 150G and Type 400G course computers provide fast heading (HDM) output from NMEA 1 at 10 Hz 0.1° resolution. This fast heading data is suitable for use with the MARPA function on radar equipment.

Course computer NMEA 2 output	
NMEA 0183 transmitted	**Information sent (* if available)**
BWC	bearing to waypoint*, distance to waypoint*, waypoint number*, time*
GLL	latitude/longitude*, time*
HDG HDM HDT	heading
VTG	course over ground* (COG), speed over ground* (SOG)

*** Note:** The course computer will only transmit these items if it has received the appropriate data.

www.Busse-Yachtshop.de email: info@busse-yachtshop.de

81173_3.book Page 38 Thursday, June 7, 2001 11:51 AM

Connect:

- the NMEA outputs from the equipment (such as navigators, wind or speed instruments to the NMEA inputs on the course computer
- the NMEA outputs on the course computer to the NMEA inputs on the equipment (such as radar)

Control unit NMEA inputs

You can connect the outputs from a single item of NMEA equipment to the NMEA inputs on the ST6001+ or ST7001+ control units.

➔ For more information, refer to the control unit owner's handbook.

SeaTalk/NMEA interface

The SeaTalk/NMEA interface (part number: E85001) enables you to connect NMEA equipment to the SeaTalk system. It allows the non-SeaTalk equipment to transmit and receive information to/from the SeaTalk system.

The interface converts:

- NMEA data from the equipment into SeaTalk data
- SeaTalk data from the SeaTalk system into NMEA data

➔ For more information about NMEA and SeaTalk received and transmitted, refer to the handbook supplied with the interface.

Connect:

- the NMEA equipment to the SeaTalk/NMEA interface
- the SeaTalk/NMEA interface to:
  - one of the course computer SeaTalk terminals
  - or, any other SeaTalk product (using one of the available interface cables)

Connecting several items of NMEA equipment

If you need to connect several NMEA items to the course computer, you will need to use an appropriate combination of:

- course computer NMEA inputs and outputs
- control unit NMEA inputs
- SeaTalk/NMEA interface (part number: E85001)

www.Busse-Yachtshop.de email: info@busse-yachtshop.de

81173_3.book Page 39 Thursday, June 7, 2001 11:51 AM

Typical NMEA connections

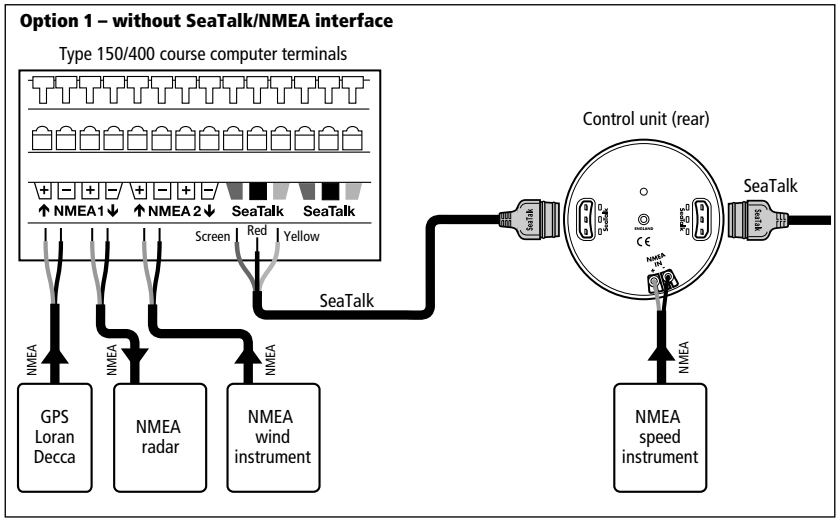

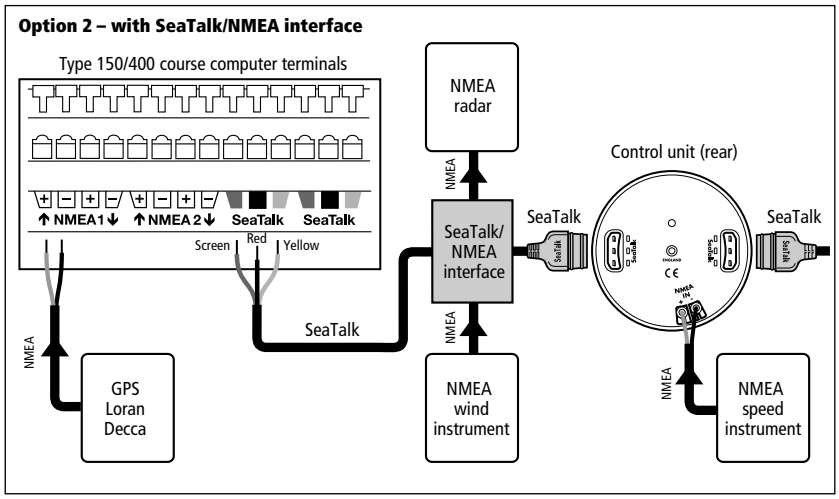

Step 9

www.Busse-Yachtshop.de email: info@busse-yachtshop.de

81173_3.book Page 40 Thursday, June 7, 2001 11:51 AM

9.3 Connecting optional components

➔ To install any of these options, refer to the information supplied with the component.

GyroPlus yaw sensor

The Type 150 and Type 400 course computers do not contain a built-in GyroPlus, but you have the option of adding:

- an external GyroPlus (part number: M81162)
- or a dealer-fitted internal GyroPlus (part number: A18069)

Handheld remotes

You can connect handheld remotes to the autopilot system:

- the **ST600R remote control unit** (part number: A12016) can act as the sole pilot control unit in your system or as a full-function remote for systems with other fixed pilot control units
- the compact **SeaTalk handheld remote** (part number: A15002) gives you full course control away from the main steering position

External alarm

The autopilot system sounds an off-course alarm from all control units. On large and/or noisy boats you can fit a Raymarine external alarm (part number: Z035, connected though E85001 interface box) as a high volume repeater.

Wind vane (sail boats)

The course computer can use wind angle information from a wind vane or instrument to maintain a course relative to the wind. You can provide wind angle information to the autopilot system by connecting it to:

- a suitable SeaTalk or NMEA instrument (providing wind angle and speed information)

  or
- a Raymarine pushpit wind vane (part number: Z159) connected through an interface box (part number: M81189)

www.Busse-Yachtshop.de email: info@busse-yachtshop.de

81173_3.book Page 41 Thursday, June 7, 2001 11:51 AM

Off switch

The course computer has inputs so you can fit an off switch if required. By closing a circuit, this switch will turn off the course computer power supply.

Connect a suitable off switch to the **OFF SWITCH** inputs on the course computer.

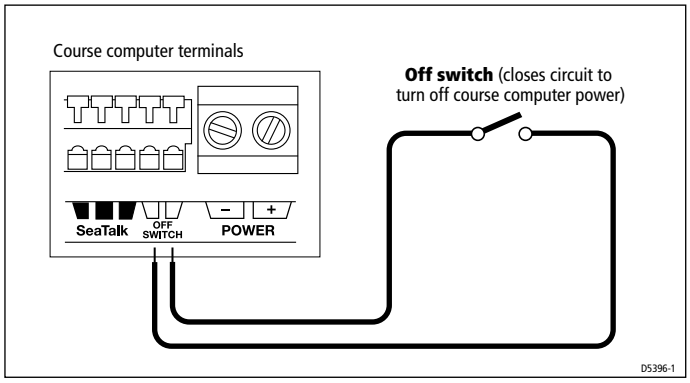

Connecting an off switch

Other manufacturers' drive units

If you are connecting another manufacturer's drive unit, refer to the specifications (on *page 45*) for information on the course computer's drive motor, drive clutch and drive solenoid terminals. Connect the drive unit to these terminals as necessary.

For more information, contact the drive unit manufacturer.

Connecting spool valves

If the drive has spool valves, connect them to the motor and solenoid terminals on the course computer as shown below. The course computer provides a negative ground for the spool valves even when it is switched off.

CAUTION:

Do NOT connect the solenoid return cables to boat's negative ground, as this will bypass the current protection devices inside the course computer.

www.Busse-Yachtshop.de email: info@busse-yachtshop.de

81173_3.book Page 42 Thursday, June 7, 2001 11:51 AM

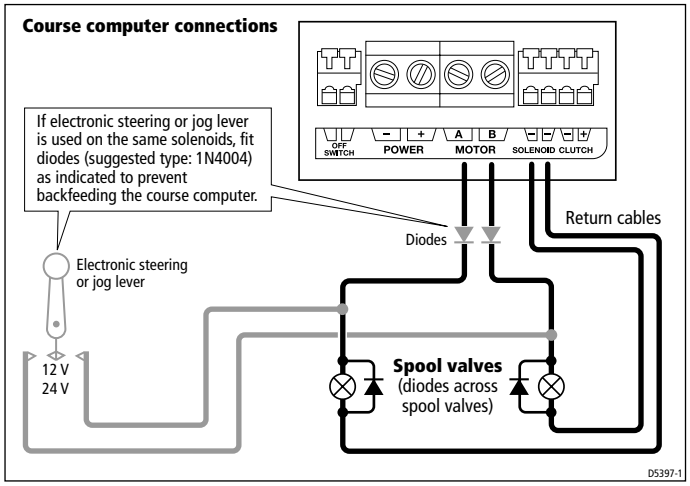

Selecting clutch voltage (Type 400/400G)

Note: *All Raymarine 12 V and 24 V drive units with a clutch have a* ***12 V clutch*** *so you do NOT need to re-position the clutch fuse.*

You can use the Type 400/400G course computers with other manufacturers' drives that have either 12 V or 24 V clutches.

Select the appropriate clutch voltage by positioning the clutch fuse to the left (12 V clutch) or right (24 V clutch).

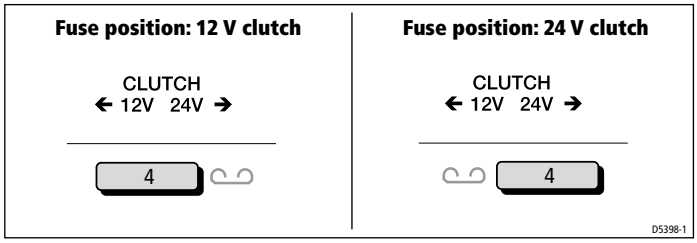

9.4 Setting-up the autopilot

When you have installed and connected all components, you need to check the system and then set-up the autopilot.

Step 9

➔ For more information about autopilot set-up, refer to the control unit owner's handbook.

www.Busse-Yachtshop.de email: info@busse-yachtshop.de

81173_3.book Page 43 Thursday, June 7, 2001 11:51 AM

Maintenance

All Raymarine products are designed to provide many years of trouble-free operation. We also put them through comprehensive testing and quality assurance procedures before shipping.

Regular checks

On a regular basis:

- check that all connections and mountings are secure and undamaged
- check the course computer for any signs of physical damage or water damage

Note: *Do **not** use chemical or abrasive materials to clean the course computer. If the case is dirty, wipe it with a clean, damp cloth.*

Fault-finding

Course computer fuses

Symptoms of a blown course computer fuse are:

- if either the power fuse or SeaTalk fuse blows, the control unit display will go blank
- if the clutch fuse blows and your drive has a clutch, the control unit will show a DRIVE STOPPED alarm message

If your control unit shows either of these symptoms, check the relevant fuse(s). If the fuse has blown, replace it with a fuse of the same current rating (see *page 14*).

➔ For more information about diagnosing faults on your autopilot system, refer to the Fault Finding section of the control unit owner's handbook.

Servicing

CAUTION:

The course computer does NOT contain user-serviceable parts. If you remove the main cover you will invalidate the warranty.

www.Busse-Yachtshop.de email: info@busse-yachtshop.de

81173_3.book Page 44 Thursday, June 7, 2001 11:51 AM

EMC, servicing and safety guidelines

- Raymarine equipment should be serviced only by authorized Raymarine service technicians. They will ensure that service procedures and replacement parts used will not affect performance. There are no user serviceable parts in any Raymarine product.
- Some products generate high voltages: never handle the cables/connectors when power is being supplied to the equipment.
- When powered up, all electrical equipment produces electromagnetic fields. These can cause adjacent pieces of electrical equipment to interact with one another, with a consequent adverse effect on operation. In order to minimize these effects and enable you to get the best possible performance from your Raymarine equipment, guidelines are given in the installation instructions, to enable you to ensure minimum interaction between different items of equipment, i.e. ensure optimum Electromagnetic Compatibility (EMC).
- Always report EMC-related problems to your nearest Raymarine dealer. We use such information to improve our quality standards.
- In some installations, it may not be possible to prevent the equipment from being affected by external influences. In general this will not damage the equipment but it can lead to spurious resetting action, or momentarily may result in faulty operation.

Product support

Raymarine products are supported by a worldwide network of distributors and Authorized Service Representatives. If you encounter any difficulties with this product, please contact either your national distributor, or your service representative, or the **Raymarine Technical Services Call Center**. Refer to the back cover or the Worldwide Distributor List for contact details.

www.Busse-Yachtshop.de email: info@busse-yachtshop.de

81173_3.book Page 45 Thursday, June 7, 2001 11:51 AM

Specifications

Course computer specifications	
Nominal supply voltage: Type 150/150G Type 400/400G	 12 V DC (fuse protected at 30 A) 12 V or 24 V DC (fuse protected at 40 A)
Operating voltage range: Type 150/150G Type 400/400G	 10 V to 16 V DC 10 V to 32 V DC
Power consumption (standby)	300 mA
GyroPlus yaw sensor:	• Type 150G/Type 400G: internal GyroPlus fitted onto circuit board • Type 150/Type 400: option of external GyroPlus or dealer-fit internal GyroPlus
Operating conditions: temperature range relative humidity limit water protection	 -10°C to 55°C (14°F to 131°F) 80% drip resistant when mounted vertically
Storage conditions: temperature range relative humidity limit	 -5°C to 50°C (23°F to 122°F) 75%
Dimensions: width height depth	 307 mm (12.1 in) 195 mm (7.7 in) 70 mm (2.8 in)
Weight	2.1 kg (4 lb 7.5 oz)
Inputs	fluxgate compass, external GyroPlus yaw sensor, rudder position sensor, NMEA 0183 v2.3 (x2), SeaTalk (x2), off switch, power, drive solenoid return
Outputs	NMEA 0183 v2.3 (x2), SeaTalk (x2), drive motor, drive clutch
Raymarine drive compatibility: Type 150/150G Type 400/400G	 all Type 1 12 V and Type CR1 12V drives/pumps all Type 1, Type 2 and Type 3 drives/pumps (drive voltage must match boat's supply voltage)
Drive motor output: Type 150/150G Type 400/400G	 continuous 18 A at 12 V continuous 30 A at supply voltage
[specifications continue on next page]	

www.Busse-Yachtshop.de email: info@busse-yachtshop.de

81173_3.book Page 46 Thursday, June 7, 2001 11:51 AM

Course computer specifications (contd)	
Drive clutch output: Type 150/150G Type 400/400G	 4 A at 12 V (fuse protected at 4 A) 4 A at 12/24 V selectable (fuse protected at 4 A)
Drive solenoid return input	5 A at supply voltage
SeaTalk output	5 A at 12 V (fuse protected at 5 A)
NMEA 0183 v2.3 inputs/outputs	See page 36 for information on NMEA 0183 received/transmitted
NMEA fast heading output	Type 150G and Type 400G transmit fast heading (HDM) from NMEA 1 at 10 Hz 0.1° resolution
Fuses	Standard automotive blade fuses to protect: • power terminals (30 A Type 150/150G; 40 A Type 400/400G) • drive clutch terminals (4 A) • SeaTalk terminals (5 A)
CE approvals - conforms to:	89/336/EC (EMC), EN60945:1997
WARNING:	Contains a possible source of ignition - **NOT** protected for use in engine compartments.

Control unit functionality

Control unit	**Course computer**		
	Type 150G/400G	**Type 150/400**	**Type 100/300**
ST7001+ ST6001+	• Internal GyroPlus yaw sensor enables enhanced course keeping using AST • Full access to AutoLearn, providing automatic steering calibration • Improved track-keeping • Steers to true and apparent wind in Wind Vane mode • Improved calibration access	• Full basic functionality • Improved track-keeping • Steers to true and apparent wind in Wind Vane mode • Improved calibration access, but without AutoLearn • Uses Raymarine steering algorithm without AST	• Standard functionality using Raymarine steering algorithm without AST • Steers only to apparent wind in Wind Vane mode • Improved calibration access, but without AutoLearn
ST7000+ ST6000+ ST600R ST80 RP650	• Enhanced course keeping using AST • Improved track-keeping • No access to AutoLearn	• Full basic functionality • Uses Raymarine steering algorithm without AST • Improved track-keeping	• Standard functionality using Raymarine steering algorithm without AST
ST7000 ST6000	• Enhanced course keeping using AST • Improved track-keeping • No access to AutoLearn	• Full basic functionality • Uses Raymarine steering algorithm without AST • Improved track-keeping	• Standard functionality using Raymarine steering algorithm without AST • No access to vessel type set up

www.Busse-Yachtshop.de email: info@busse-yachtshop.de

81173_3.book Page 47 Thursday, June 7, 2001 11:51 AM

Glossary

Term	Meaning
°	degrees
A	Amps
AST (Advanced Steering Technology)	AST (Advanced Steering Technology) is Raymarine's unique advanced steering algorithm. It uses inputs from a wide variety of sensors to tune the autopilot's operation to provide superior control of the boat in any condition.
AutoLearn	Self-learning calibration feature available on Type 150G and Type 400G course computers.
AWG	American Wire Gauge
CE	Marked on products that comply with defined European Community standards
CR pump	Constant Running hydraulic pump
EMC (Electromagnetic Compatibility)	When powered up, all electrical equipment produces electromagnetic fields. These can cause adjacent pieces of electrical equipment to interact with one another, and this can degrade their performance. By following the EMC guidelines in this handbook, you can minimize these effects by ensuring optimum Electromagnetic Compatibility (EMC) between equipment.
Fluxgate	Standard Raymarine compass supplied with course computer core pack
ft	foot (1 ft = 305 mm)
GPS	Global Positioning System
GyroPlus	Raymarine's GyroPlus yaw sensor that measures the boat's rate of turn. It is built into the Type 150G and Type 400G course computers.
Hz	Hertz (cycles per second)
I/O drive	Inboard/Outboard or stern drive
in	inch (1 in = 25.4 mm)
kg	kilograms (1 kg = 2.2 lb)
lb	pound (1 lb = 0.45 kg)
m	metre (1 m = 39.4 inches)
MARPA	Mini Automatic Radar Plotting Aid
mm	millimeter (1 mm = 0.04 inches)
NMEA	The NMEA (National Maritime Electronics Association) protocol is an internationally accepted serial communication interface standard for sharing data between electronic equipment. Raymarine products can share information with non-SeaTalk equipment using the NMEA 0183 protocol.

www.Busse-Yachtshop.de email: info@busse-yachtshop.de

81173_3.book Page 48 Thursday, June 7, 2001 11:51 AM

Term	Meaning
oz	ounce (1 oz = 0.028 kg)
SeaTalk	SeaTalk is Raymarine's proprietary communication system. It links products to provide a single, integrated system sharing power and data.
SeaTalk bus	This refers to the continuous SeaTalk system connecting together a series of Raymarine units.
SSB	Single Side Band (radio)
Type 150	12 V course computer without internal GyroPlus
Type 150G	12 V course computer with internal GyroPlus
Type 400	12/24 V course computer without internal GyroPlus
Type 400G	12/24 V course computer with internal GyroPlus
V	Volts
VHF	Very High Frequency (radio)
Yaw	Boat's rate of turn (°/sec)

www.Busse-Yachtshop.de email: info@busse-yachtshop.de

81173_3.book Page 49 Thursday, June 7, 2001 11:51 AM

Index

A

Autopilot system
- Core pack parts 4
- Key components 1–3
- Optional components 3

C

Cable clamp installation 30
Cabling
- Compass 20
- Course computer power supply 15
- General guidelines 7
- Linear rudder position sensor 27
- Rotary rudder position sensor 25

Clutch voltage, Selecting 42
Compass
- Cabling 20
- Description 2, 17
- Dimensions 17
- Installation 17–21
- Location, non steel hulls 18
- Location, steel hulls 19
- Mounting 20
- Multiple compass systems 21
- NMEA compass 21
- SeaTalk compass 21

Connecting
- NMEA compass 21
- NMEA equipment 36–39
- Non-Raymarine drives 41
- Optional components 40–42
  - External alarm 40
  - GyroPlus 40
  - Handheld remotes 40
  - Off switch 41
  - Wind vane 40
- Raymarine equipment 32–35
  - Additional control units 32
  - SeaTalk equipment 32
- SeaTalk compass 21

Control unit
- Description 3, 29
- Installation 29

Core pack, Parts supplied 4
Course computer
- 12V and 12/24V versions 2
- Cable clamp 30
- Cabling 14
- Connector cover 12
- Description 1
- Dimensions 10
- Fuses 14, 43
- GyroPlus options 2, 40
- Input/output terminals 13
- Installation 9–16
- Location 6, 10
- Main parts 9
- Mounting 12
- NMEA data 36–37
- Orientation 11
- Power cable
  - Circuit breaker 16
  - Connecting 15
  - Fuse 16
  - Sizes 16
- Specifications 45

D

Dimensions
- Compass 17
- Course computer 10
- Rudder position sensor
  - Linear 26
  - Rotary 22

Drive unit
- Description 3, 28
- Installation 28

E

EMC
- Conformance statement vii
- Installation guidelines 7
- Servicing and safety guidelines 44

External alarm 40

www.Busse-Yachtshop.de email: info@busse-yachtshop.de

81173_3.book Page 50 Thursday, June 7, 2001 11:51 AM

F

Fast heading (HDM) output 37
Fault-finding 43
Fluxgate compass, See Compass
Fuses
  Course computer 14, 43
  Course computer power 16

G

Glossary 47
GyroPlus yaw sensor
  General description 2
  Options 2, 40

H

Handheld remotes 40

I

Important information
  EMC conformance vii
  Handbook accuracy vii
  Safety notices vi
  Warranty vi
Installation
  Cable clamp 30
  Check locations 6–8
  Checking kit 1–4
  Compass 17–21
  Control unit 29
  Course computer 9–16
  Drive unit 28
  Rudder position sensor 22–27
    Linear 26–27
    Rotary 22–25
  Tools 4

L

Linear rudder sensor 26–27
Locations
  Compass 6, 18
  Course computer 6, 10
  Rotary rudder position sensor 7, 24

M

Maintenance and servicing 43–44
Mounting
  Compass 20
  Course computer 12
  Rudder position sensor
    Linear 26
    Rotary 24
Multiple compass systems 21

N

NMEA compass 21
NMEA data inputs/outputs 36–37
  Fast heading (HDM) output 37
  Navigator data inputs 37
NMEA equipment
  Connecting 36–39
Non-Raymarine drives
  Connecting 41
  Selecting clutch voltage 42

O

Off switch 41
Optional components
  External alarm 40
  GyroPlus 40
  Handheld remotes 40
  Off switch 41
  Wind vane 40

P

Parts supplied 4
Product support 44

R

Raymarine equipment
  Connecting 32–35
    Additional control units 32
    SeaTalk equipment 32
Regular checks 43
Remote control 40
Rotary rudder sensor 22–25
Rudder position sensor
  Description 2
  Linear installation 26–27
    Cabling 27
    Description 26

www.Busse-Yachtshop.de email: info@busse-yachtshop.de

81173_3.book Page 51 Thursday, June 7, 2001 11:51 AM

Dimensions 26
Mounting 26
Rotary installation 22–25
Alignment 23
Cabling 25
Description 22
Dimensions 22
Location 7, 24
Mounting 24
Rudder reference,
See Rudder position sensor

S

Safety notices vi
SeaTalk compass 21
SeaTalk equipment 32
Servicing 43–44
Specifications 45
Step 1, Check kit 1–4
Step 2, Check locations 6–8
Step 3, Install course computer 9–16
Step 4, Install compass 17–21
Step 5, Install rudder sensor 22–27
Step 6, Install drive unit 28
Step 7, Install control unit 29
Step 8, Clamp cables 30
Step 9, Integrate system 31–42

T

Technical support 44
Tools required 4

W

Warranty vi
Wind vane 40

Y

Yaw sensor (GyroPlus) 2, 40

www.Busse-Yachtshop.de email: info@busse-yachtshop.de

81173_3.book Page 52 Thursday, June 7, 2001 11:51 AM

www.Busse-Yachtshop.de email: info@busse-yachtshop.de

Rudder position sensor template

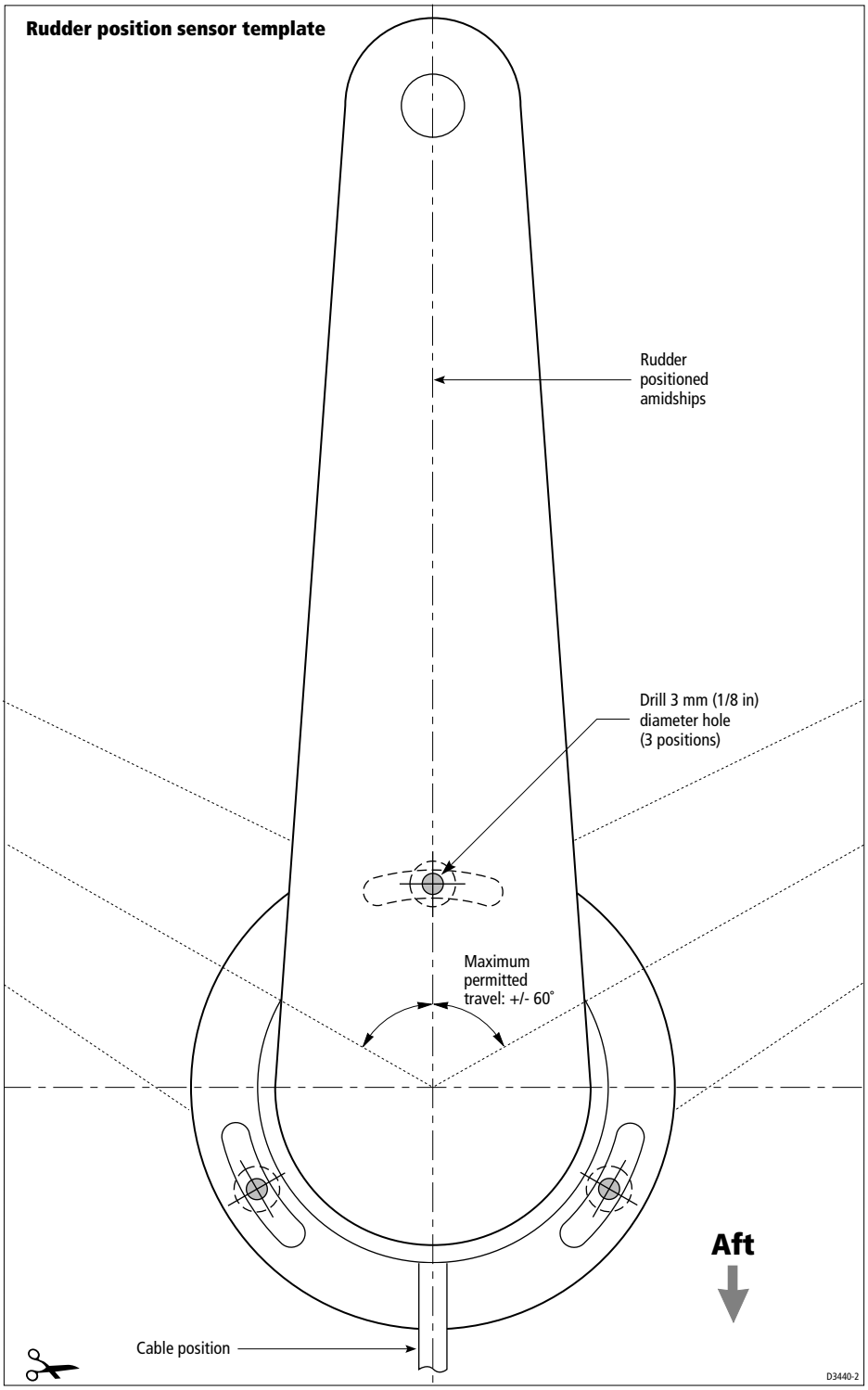

www.Busse-Yachtshop.de email: info@busse-yachtshop.de

Limited Warranty Certificate

Raymarine warrants each new Light Marine/Dealer Distributor Product to be of good materials and workmanship, and will repair or exchange any parts proven to be defective in material and workmanship under normal use for a period of 2 years/24 months from date of sale to end user, except as provided below.

Defects will be corrected by Raymarine or an authorized Raymarine dealer. Raymarine will, except as provided below, accept labor cost for a period of 2 years/24 months from the date of sale to end user. During this period, except for certain products, travel costs (auto mileage and tolls) up to 100 round trip highway miles (160 kilometres) and travel time of 2 hours, will be assumed by Raymarine only on products where proof of installation or commission by authorized service agents, can be shown.

Warranty Limitations

Raymarine Warranty policy does not apply to equipment which has been subjected to accident, abuse or misuse, shipping damage, alterations, corrosion, incorrect and/or non-authorized service, or equipment on which the serial number has been altered, mutilated or removed.

Except where Raymarine or its authorized dealer has performed the installation, it assumes no responsibility for damage incurred during installation.

This Warranty does not cover routine system checkouts or alignment/calibration, unless required by replacement of part(s) in the area being aligned.

A suitable proof of purchase, showing date, place, and serial number must be made available to Raymarine or authorized service agent at the time of request for Warranty service.

Consumable items, (such as: Chart paper, lamps, fuses, batteries, styli, stylus/drive belts, radar mixer crystals/diodes, snap-in impeller carriers, impellers, impeller bearings, and impeller shaft) are specifically excluded from this Warranty.

Magnetrons, Cathode Ray Tubes (CRT), TFT Liquid Crystal Displays (LCD) and cold cathode fluorescent lamps (CCFL), hailer horns and transducers are warranted for 1 year/12 months from date of sale. These items must be returned to a Raymarine facility.

All costs associated with transducer replacement, other than the cost of the transducer itself, are specifically excluded from this Warranty.

Overtime premium labor portion of services outside of normal working hours is not covered by this Warranty.

Travel cost allowance on certain products with a suggested retail price below $2500.00 is not authorized. When/or if repairs are necessary, these products must be forwarded to a Raymarine facility or an authorized dealer at owner's expense will be returned via surface carrier at no cost to the owner.

Travel costs other than auto mileage, tolls and two (2) hours travel time, are specifically excluded on all products. Travel costs which are excluded from the coverage of this Warranty include but are not limited to: taxi, launch fees, aircraft rental, subsistence, customs, shipping and communication charges etc. Travel costs, mileage and time, in excess to that allowed must have prior approval in writing.

TO THE EXTENT CONSISTENT WITH STATE AND FEDERAL LAW:

(1) THIS WARRANTY IS STRICTLY LIMITED TO THE TERMS INDICATED HEREIN, AND NO OTHER WARRANTIES OR REMEDIES SHALL BE BINDING ON RAYMARINE INCLUDING WITHOUT LIMITATION ANY WARRANTIES OF MERCHANTABLE OR FITNESS FOR A PARTICULAR PURPOSE.

(2) Raymarine shall not be liable for any incidental, consequential or special (including punitive or multiple) damages.

All Raymarine products sold or provided hereunder are merely aids to navigation. It is the responsibility of the user to exercise discretion and proper navigational skill independent of any Raymarine equipment.

Document number: 84064-8
April 2001

www.Busse-Yachtshop.de email: info@busse-yachtshop.de

Raymarine

Factory Service Centers

United States of America

Raymarine Inc
22 Cotton Road, Unit D
Nashua, NH 03063-4219, USA

Telephone: +1 603 881 5200
Fax: +1 603 864 4756
www.raymarine.com

Sales & Order Services
Telephone: +1 800 539 5539 Ext. 2333 or
+1 603 881 5200 Ext. 2333

Technical Support
Telephone: +1 800 539 5539 Ext. 2444 or
+1 603 881 5200 Ext. 2444
Email: techsupport@raymarine.com

Product Repair Center
Telephone: +1 800 539 5539 Ext. 2118

UK, Europe, Middle East, Far East

Raymarine Ltd
Anchorage Park, Portsmouth
PO3 5TD, England

Telephone: +44 (0)23 9269 3611
Fax: +44 (0)23 9269 4642
www.raymarine.com

Customer Support
Telephone: +44 (0)23 9271 4713
Fax: +44 (0)23 9266 1228

Email: techsupport@raymarine.com

Stick barcode label here

Purchased from _____ Purchase date _____

Dealer address _____

_____

Installed by _____ Installation date _____

Commissioned by _____

_____ Commissioning date _____

Owner's name _____

Mailing address _____

_____

This portion should be completed and retained by the owner.

www.Busse-Yachtshop.de email: info@busse-yachtshop.de